US009500049B1

(12) **United States Patent**
Orgeron et al.

(10) **Patent No.: US 9,500,049 B1**
(45) **Date of Patent: *Nov. 22, 2016**

(54) **GRIP AND VERTICAL STAB APPARATUS AND METHOD**

(71) Applicant: **T&T Engineering Services, Inc.**, Tomball, TX (US)

(72) Inventors: **Keith J. Orgeron**, Spring, TX (US); **Gary Firth**, Hockley, TX (US)

(73) Assignee: **Schlumberger Technology Corporation**, Sugar Land, TX (US)

(*) Notice: Subject to any disclaimer, the term of this patent is extended or adjusted under 35 U.S.C. 154(b) by 0 days.

This patent is subject to a terminal disclaimer.

(21) Appl. No.: **13/855,599**

(22) Filed: **Apr. 2, 2013**

Related U.S. Application Data

(63) Continuation-in-part of application No. 12/632,261, filed on Dec. 7, 2009, now Pat. No. 8,408,334.

(60) Provisional application No. 61/121,838, filed on Dec. 11, 2008.

(51) **Int. Cl.**
E21B 19/15 (2006.01)
G21F 7/00 (2006.01)
(Continued)

(52) **U.S. Cl.**
CPC ***E21B 19/155*** (2013.01); ***B25J 5/02*** (2013.01); ***B25J 21/00*** (2013.01); ***G21F 7/00*** (2013.01)

(58) **Field of Classification Search**
USPC 166/77.53, 85.5; 269/43, 59, 60; 294/81.2, 81.6, 81.61, 81.62; 414/22.51–22.59, 22.61–22.69, 23, 414/347, 589, 623, 624, 664, 680, 731, 732, 414/735, 736, 744.3, 744.7, 745.1, 745.2, 414/745.4, 745.5, 745.6, 751.1; 74/89.25, 74/89.32, 89.33; 81/57.16, 57.24, 57.35; 901/16, 31
See application file for complete search history.

(56) **References Cited**

U.S. PATENT DOCUMENTS

62,404 A 2/1867 Gile et al.
184,168 A 11/1876 Nickle
364,077 A 5/1887 Addis
(Continued)

FOREIGN PATENT DOCUMENTS

EP 0024433 A1 3/1981
GB 727780 A 4/1955
(Continued)

OTHER PUBLICATIONS

Chronis, Nicholas P.; Mechanisms & Mechanical Devices Sourcebook, 1991, ch. 10, pp. 399-414, ISBN 0-07-010918-4, McGraw-Hill, Inc.

Primary Examiner — Gregory Adams
(74) *Attorney, Agent, or Firm* — John G. Fischer, Esq.; Scheef & Stone, L.L.P.

(57) **ABSTRACT**

A tubular handling apparatus has a main rotating structural member pivotally movable between a first position and a second position, an arm interconnected to the main rotating structural member, and a gripper mechanism affixed to an end of the arm opposite the main rotating structural member. The gripper mechanism has a stab frame, a first gripper translatably attached to a side of the stab frame, and a second gripper translatably attached to the side of the stab frame below the first gripper. A connection bar is connected to the first and second grippers so as to translate the grippers for a substantially identical distance. A translating mechanism translates the grippers along the side of the stab frame.

7 Claims, 10 Drawing Sheets

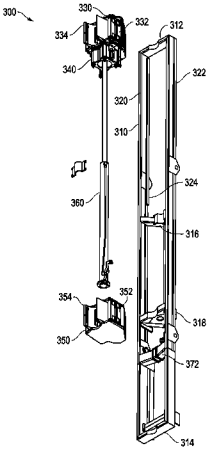

(51) **Int. Cl.**

B25J 21/00	(2006.01)
B25J 5/02	(2006.01)

(56) **References Cited**

U.S. PATENT DOCUMENTS

514,715	A		2/1894	Jenkins
1,175,792	A		3/1916	Mickelsen
1,264,867	A		4/1918	Schuh
1,312,009	A		8/1919	Thrift
1,318,789	A		10/1919	Moschel
1,396,317	A		11/1921	Boyter
1,417,490	A		5/1922	Brandon
1,972,635	A		9/1934	Whinnen
1,981,304	A		11/1934	Brandt
2,124,154	A		7/1937	Sovincz
2,327,461	A		8/1943	Rowe
2,369,534	A		2/1945	Cohen
2,382,767	A		8/1945	Zeilman
2,476,210	A		7/1949	Moore
2,497,083	A		2/1950	Hildebrand
2,509,853	A		5/1950	Wilson
2,535,054	A		12/1950	Ernst et al.
2,592,168	A		4/1952	Morris et al.
2,595,307	A		5/1952	Selberg
2,715,014	A		8/1955	Garnett et al.
2,770,493	A		11/1956	Fieber
2,771,204	A	*	11/1956	McCormick 414/623
2,814,396	A		11/1957	Neal, Sr.
2,828,024	A		3/1958	True
2,840,244	A		6/1958	Thomas, Jr .
3,016,922	A		1/1962	Wilson
3,033,529	A		5/1962	Pierrat
3,059,905	A		10/1962	Tompkins
3,076,560	A		2/1963	Bushong et al.
3,136,394	A		6/1964	Woolslayer et al.
3,177,944	A		4/1965	Knights
3,180,496	A		4/1965	Smith
3,194,313	A		7/1965	Fanshawe
3,262,593	A		7/1966	Hainer
3,280,920	A	*	10/1966	Scott 173/44
3,331,585	A		7/1967	Dubberke
3,365,762	A		1/1968	Spiri
3,464,507	A		9/1969	Alexander et al.
3,477,522	A		11/1969	Templeton
3,559,821	A		2/1971	James
3,561,811	A		2/1971	Turner, Jr.
3,633,771	A	*	1/1972	Woolslayer et al. 414/22.55
3,682,259	A		8/1972	Cintract et al.
3,702,640	A		11/1972	Cintract et al.
3,703,968	A		11/1972	Uhrich et al.
3,774,781	A		11/1973	Merkley
3,804,264	A		4/1974	Hedeen et al.
3,805,463	A		4/1974	Lang et al.
3,806,021	A		4/1974	Moroz et al.
3,823,916	A		7/1974	Shaw
3,848,850	A		11/1974	Bemis
3,860,122	A		1/1975	Cernosek
3,883,009	A		5/1975	Swoboda, Jr. et al.
3,942,593	A		3/1976	Reeve, Jr. et al.
3,963,133	A		6/1976	Gilli
3,986,619	A		10/1976	Woolslayer et al.
3,991,887	A		11/1976	Trout
3,995,746	A		12/1976	Usagida
4,011,694	A		3/1977	Langford
4,030,698	A		6/1977	Hansen
4,044,952	A		8/1977	Williams et al.
4,067,369	A	*	1/1978	Harmon 144/34.1
4,135,340	A		1/1979	Cox et al.
4,138,805	A		2/1979	Patterson
4,142,551	A		3/1979	Wilms
4,158,283	A		6/1979	Nation
4,172,684	A		10/1979	Jenkins
4,221,269	A		9/1980	Hudson
4,269,554	A		5/1981	Jackson
4,276,918	A		7/1981	Sigouin
4,290,495	A		9/1981	Elliston
4,303,270	A		12/1981	Adair
4,336,840	A		6/1982	Bailey
4,386,883	A		6/1983	Hogan et al.
4,403,666	A		9/1983	Willis
4,403,897	A		9/1983	Willis
4,403,898	A		9/1983	Thompson
4,407,629	A		10/1983	Willis
4,420,917	A		12/1983	Parlanti
4,426,182	A		1/1984	Frias et al.
4,440,536	A		4/1984	Scaggs
4,492,501	A		1/1985	Haney
4,529,094	A		7/1985	Wadsworth
4,547,110	A		10/1985	Davidson et al.
4,586,572	A	*	5/1986	Myers et al. 175/85
4,595,066	A		6/1986	Nelmark et al.
4,598,509	A		7/1986	Woolslayer et al.
4,650,235	A	*	3/1987	Shaginian et al. 294/201
4,650,237	A		3/1987	Lessway
4,688,983	A		8/1987	Lindbom
4,702,663	A	*	10/1987	Mischke et al. 414/618
4,708,581	A		11/1987	Adair
4,759,414	A		7/1988	Willis
4,765,401	A		8/1988	Boyadjieff
4,767,100	A		8/1988	Philpot
4,822,230	A		4/1989	Slettedal
4,834,604	A	*	5/1989	Brittain et al. 414/22.55
4,869,137	A		9/1989	Slator
4,982,853	A		1/1991	Kishi
5,060,762	A		10/1991	White
5,099,707	A	*	3/1992	Tori et al. 74/490.03
5,135,119	A		8/1992	Larkin
5,150,642	A		9/1992	Moody et al.
5,186,264	A		2/1993	du Chaffaut
5,255,751	A	*	10/1993	Stogner 175/203
5,415,057	A		5/1995	Nihei et al.
5,458,454	A		10/1995	Sorokan
5,518,575	A	*	5/1996	Watanabe 156/494
5,597,987	A		1/1997	Gilliland et al.
5,609,226	A		3/1997	Penisson
5,609,260	A		3/1997	Liao
5,609,457	A		3/1997	Burns
5,649,745	A		7/1997	Anderson
5,660,087	A		8/1997	Rae
5,671,932	A		9/1997	Chapman
5,702,139	A		12/1997	Buck
5,711,382	A	*	1/1998	Hansen et al. 175/52
5,806,589	A		9/1998	Lang
5,848,647	A		12/1998	Webre et al.
5,931,238	A		8/1999	Gilmore et al.
5,964,550	A		10/1999	Blandford et al.
5,988,299	A		11/1999	Hansen et al.
5,992,801	A		11/1999	Torres
5,993,140	A		11/1999	Crippa
6,003,598	A		12/1999	Andreychuk
6,047,771	A	*	4/2000	R.o slashed.ynestad .. 166/77.52
6,079,490	A		6/2000	Newman
6,079,925	A		6/2000	Morgan et al.
6,158,516	A		12/2000	Smith et al.
6,220,807	B1		4/2001	Sorokan
6,227,587	B1		5/2001	Terral
6,234,253	B1		5/2001	Dallas
6,237,445	B1		5/2001	Wesch, Jr.
6,253,845	B1		7/2001	Belik
6,263,763	B1		7/2001	Feigel, Jr. et al.
6,264,128	B1		7/2001	Shampine et al.
6,264,395	B1		7/2001	Allamon et al.
6,279,662	B1		8/2001	Sonnier
6,298,928	B1		10/2001	Penchansky
6,311,788	B1		11/2001	Weixler
6,343,892	B1		2/2002	Kristiansen
6,398,186	B1		6/2002	Lemoine
6,431,286	B1		8/2002	Andreychuk
6,471,439	B2		10/2002	Allamon et al.
6,485,285	B1	*	11/2002	Shiotani 425/139
6,502,641	B1		1/2003	Carriere et al.
6,533,045	B1		3/2003	Cooper
6,543,551	B1		4/2003	Sparks et al.
6,543,555	B2		4/2003	Casagrande

(56) **References Cited**

U.S. PATENT DOCUMENTS

6,550,128	B1	4/2003	Lorenz	
6,557,641	B2	5/2003	Sipos et al.	
6,581,698	B1	6/2003	Dirks	
6,609,573	B1	8/2003	Day	
6,705,414	B2	3/2004	Simpson et al.	
2,745,646	A1	6/2004	Pietras et al.	
6,748,823	B2	6/2004	Pietras	
6,763,898	B1	7/2004	Roodenburg et al.	
6,779,614	B2	8/2004	Oser	
6,814,149	B2	11/2004	Liess et al.	
6,845,814	B2	1/2005	Mason et al.	
6,854,520	B1	2/2005	Robichaux	
7,017,450	B2	3/2006	Bangert	
7,028,585	B2	4/2006	Pietras et al.	
7,036,202	B2	5/2006	Lorenz	
7,036,396	B2 *	5/2006	Moe et al.	81/57.2
7,044,315	B2	5/2006	Willim	
7,055,594	B1	6/2006	Springett et al.	
7,077,209	B2	7/2006	McCulloch et al.	
7,090,035	B2	8/2006	Lesko	
7,090,254	B1	8/2006	Pietras et al.	
7,117,938	B2	10/2006	Hamilton et al.	
7,121,166	B2	10/2006	Drzewiecki	
7,172,038	B2	2/2007	Terry et al.	
7,249,639	B2	7/2007	Belik	
7,289,871	B2	10/2007	Williams	
7,296,623	B2	11/2007	Koithan et al.	
7,398,833	B2	7/2008	Ramey et al.	
7,413,398	B2 *	8/2008	Bangert et al.	414/745.2
7,438,127	B2	10/2008	Lesko	
7,503,394	B2	3/2009	Bouligny	
7,726,929	B1	6/2010	Orgeron	
7,918,636	B1	4/2011	Orgeron	
7,946,795	B2	5/2011	Orgeron	
7,980,802	B2	7/2011	Orgeron	
8,011,426	B1	9/2011	Orgeron	
8,128,332	B2	3/2012	Orgeron	
8,172,497	B2	5/2012	Orgeron et al.	
8,192,128	B2	6/2012	Orgeron	
8,192,129	B1	6/2012	Orgeron	
8,235,104	B1	8/2012	Sigmar et al.	
8,371,790	B2	2/2013	Sigmar et al.	
8,393,844	B2	3/2013	Orgeron	
8,408,334	B1 *	4/2013	Orgeron	175/85
8,419,335	B1	4/2013	Orgeron	
8,469,085	B2	6/2013	Orgeron	
8,469,648	B2	6/2013	Orgeron	
8,474,806	B2	7/2013	Orgeron	
8,496,238	B1	7/2013	Orgeron	
8,506,229	B2	8/2013	Orgeron	
8,550,174	B1	10/2013	Orgeron et al.	
8,646,522	B1	2/2014	Orgeron	
8,690,508	B1	4/2014	Orgeron	
2002/0070187	A1	6/2002	Willim	
2003/0221871	A1	12/2003	Hamilton et al.	
2004/0040926	A1	3/2004	Irsch et al.	
2005/0160880	A1 *	7/2005	Schulze-Beckinghausen et al.	81/57.34
2005/0269133	A1 *	12/2005	Little	175/52
2006/0016775	A1	1/2006	Willim	
2006/0151215	A1	7/2006	Skogerbo	
2007/0074460	A1	4/2007	Belik	
2007/0286707	A1 *	12/2007	Eddowes et al.	414/22.51
2008/0078965	A1	4/2008	Lane et al.	
2008/0174131	A1	7/2008	Bouligny et al.	
2008/0202812	A1	8/2008	Childers et al.	
2008/0253866	A1 *	10/2008	Lops et al.	414/22.55

FOREIGN PATENT DOCUMENTS

GB	2264736 A	9/1993	
JP	20011287127 A1	10/2001	
WO	93/15303 A1	8/1993	
WO	2006/038790 A1	4/2006	
WO	WO 2006038790 A1 *	4/2006	E21B 19/15

* cited by examiner

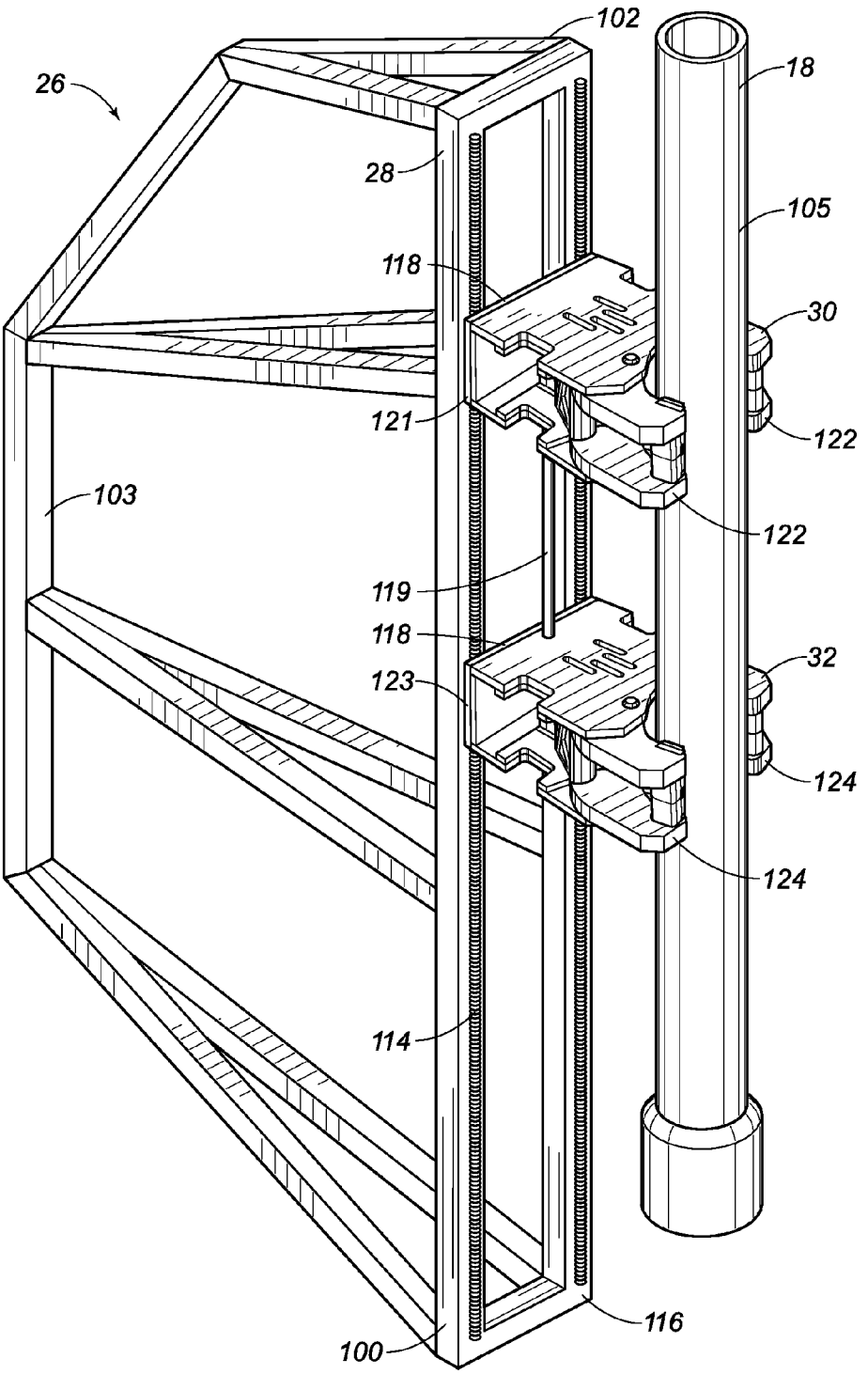
102
18
26
28
105
118
30
121
122
103
122
119
118
32
123
124
124
114
116
100

FIG. 1

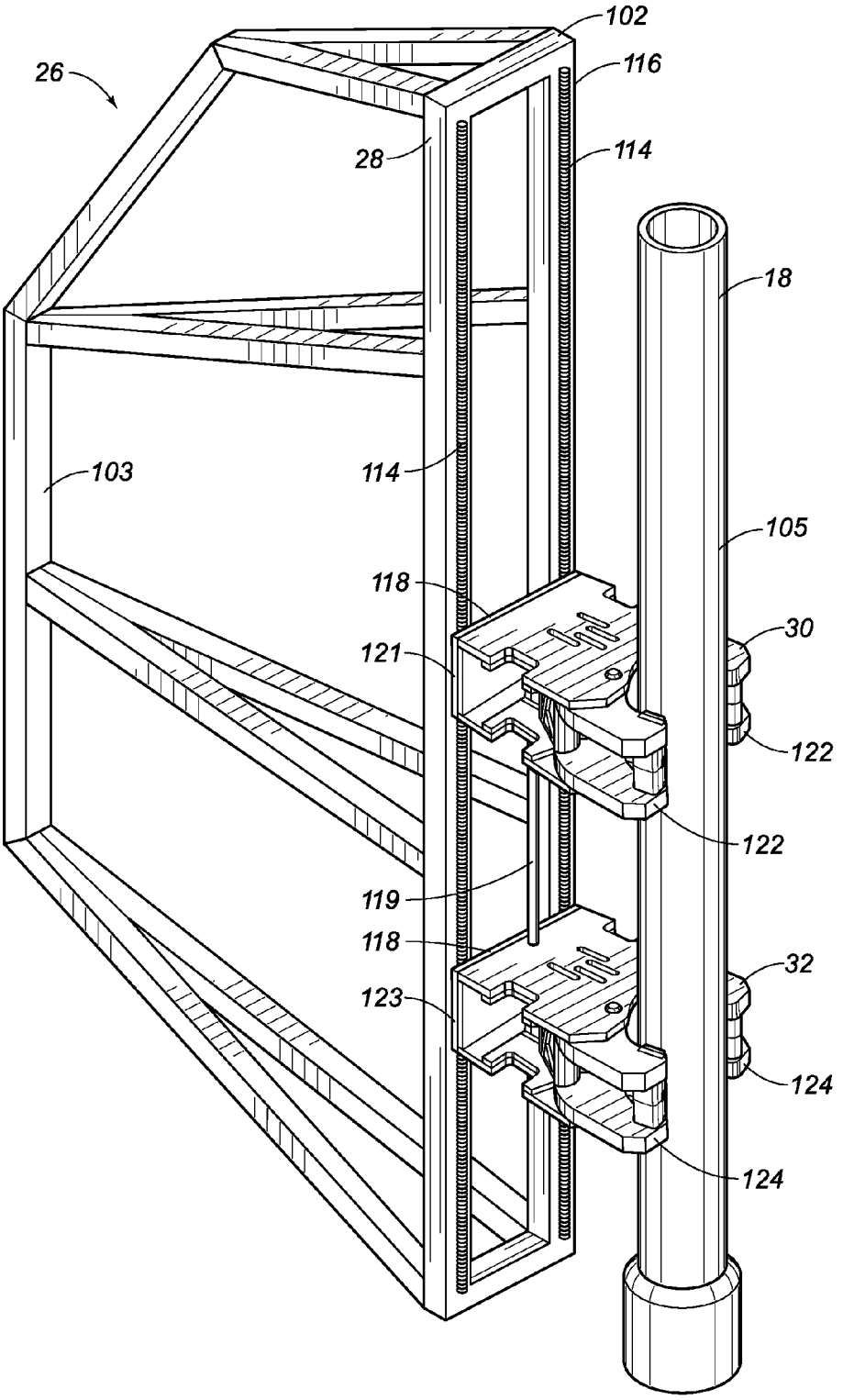
102
116
26
28
114
18
103
114
105
118
30
121
122
122
119
118
32
123
124
124

FIG. 2

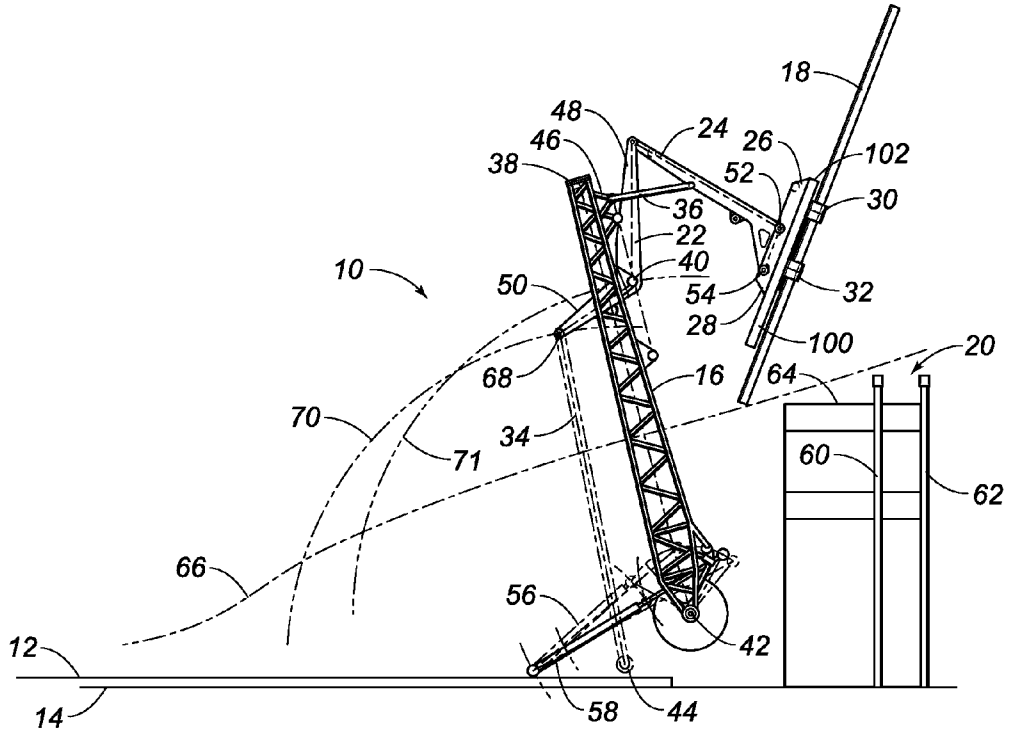
18
48
46
24
26
102
38
52
30
36
22
10
40
50
54
32
28
100
20
68
16
64
70
34
71
60
62
66
56
42
12
58
44
14

FIG. 3

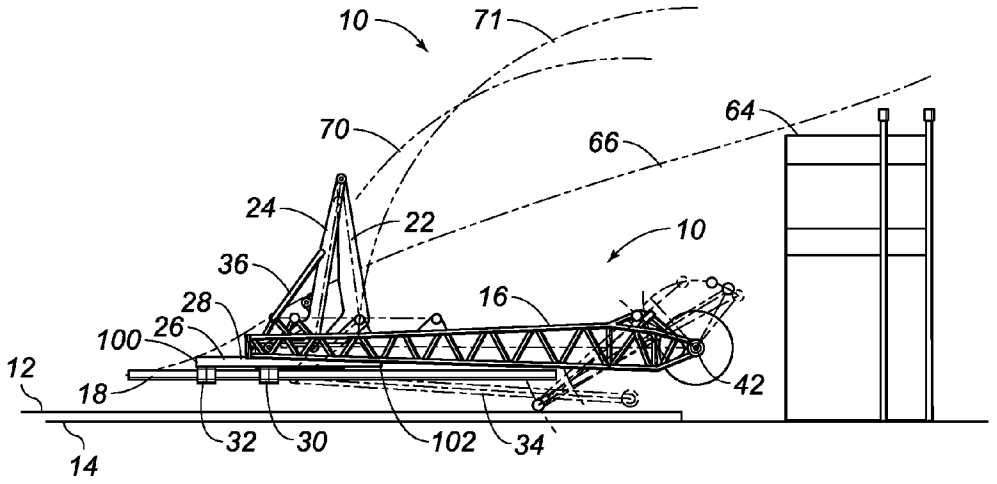
10
71
70
64
66
24
22
10
36
16
28
100
26
42
12
18
32
30
102
34
14

FIG. 4

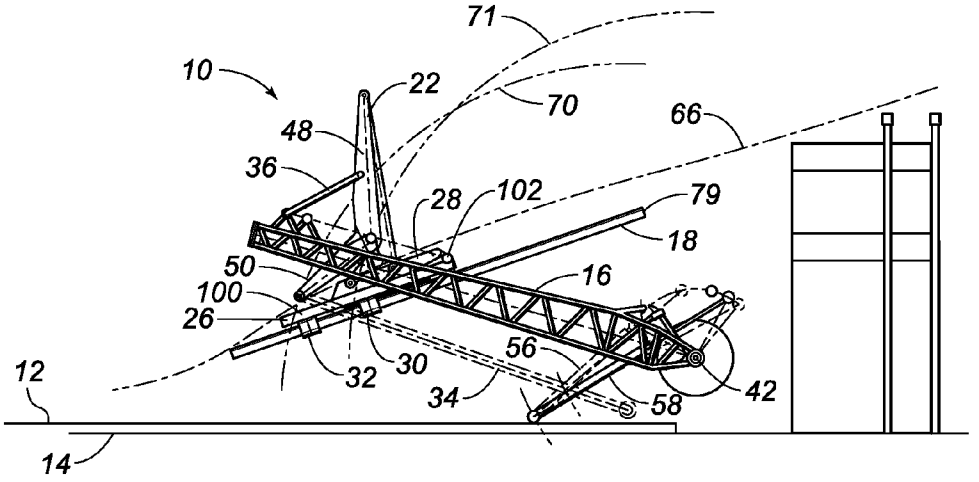
71
10
22
70
48
66
36
28
102
79
18
50
16
100
26
56
12
32
30
34
58
42
14

FIG. 5

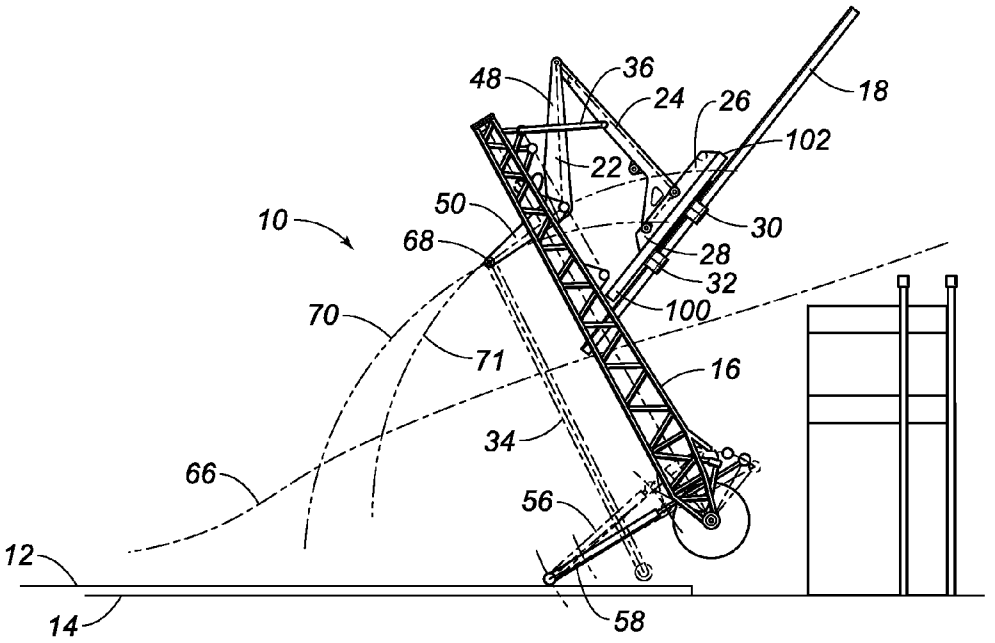
48
36
24
26
18
102
22
50
10
30
68
28
32
100
70
71
16
34
66
56
12
58
14

FIG. 6

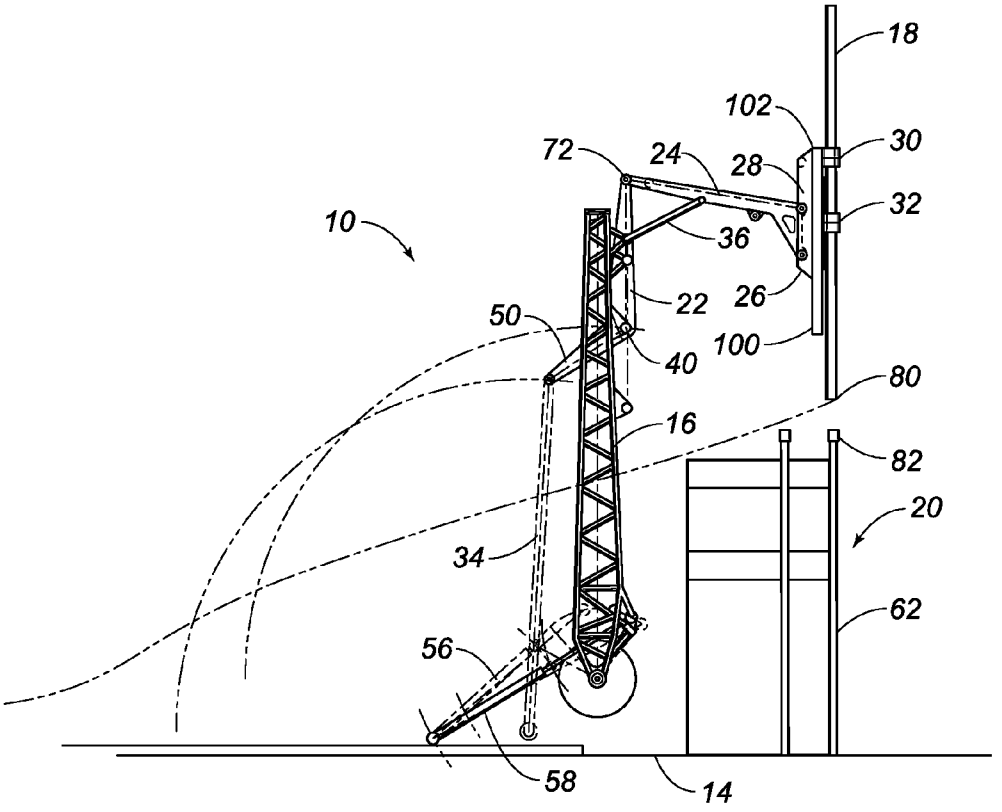

FIG. 7

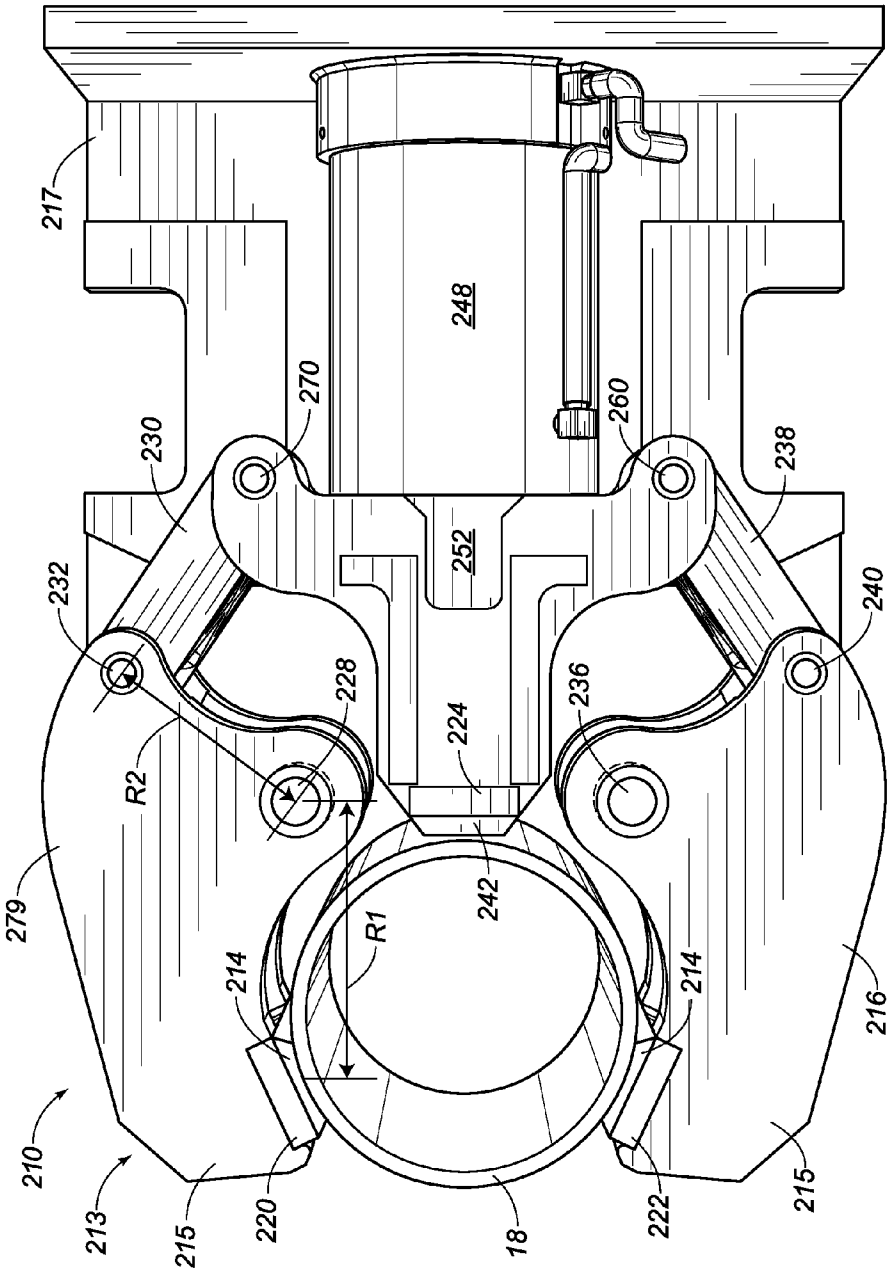
217
248
270
260
230
238
252
232
240
228
236
224
R2
R1
242
279
214
214
216
210
213
215
220
18
222
215

FIG. 8

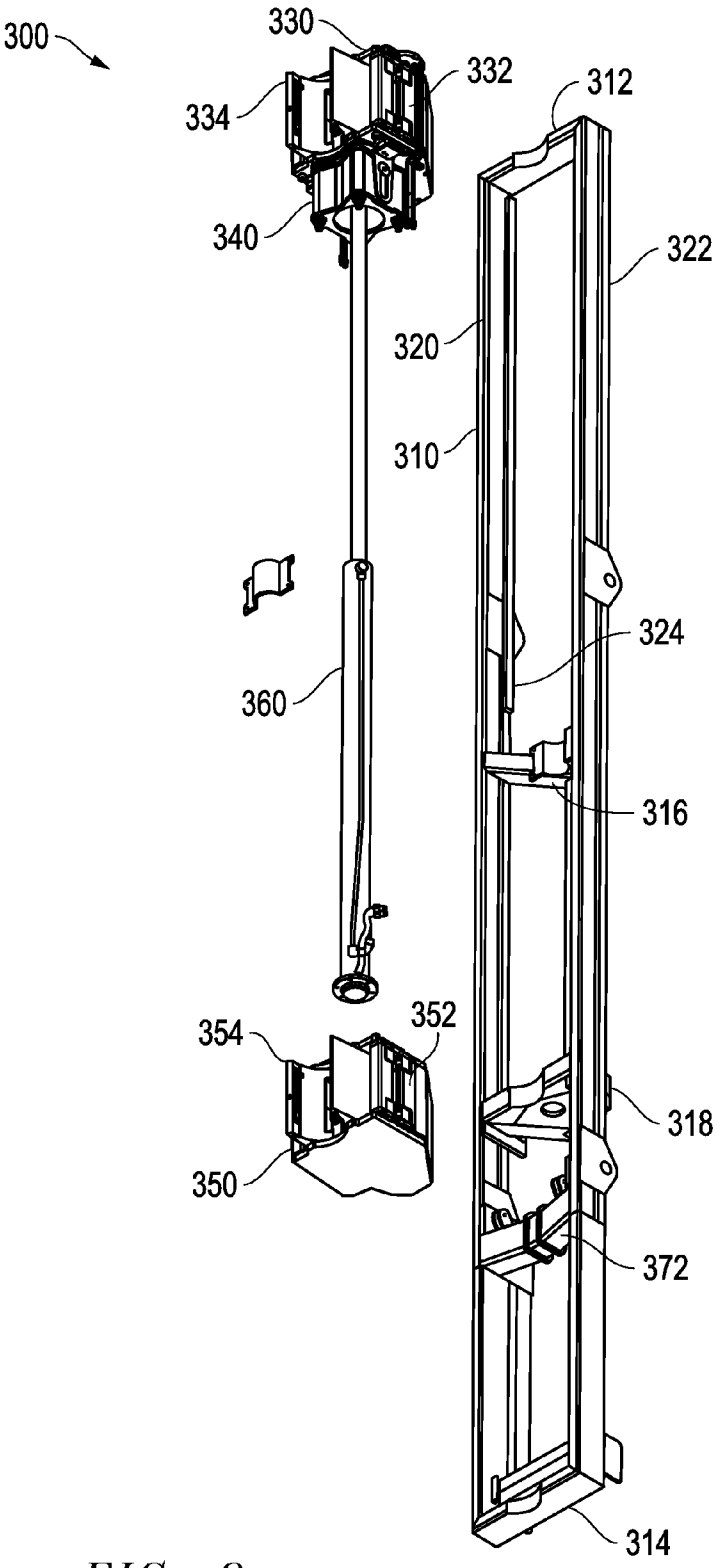
300
330
332
334
312
340
322
320
310
324
360
316
352
354
318
350
372
314

FIG. 9

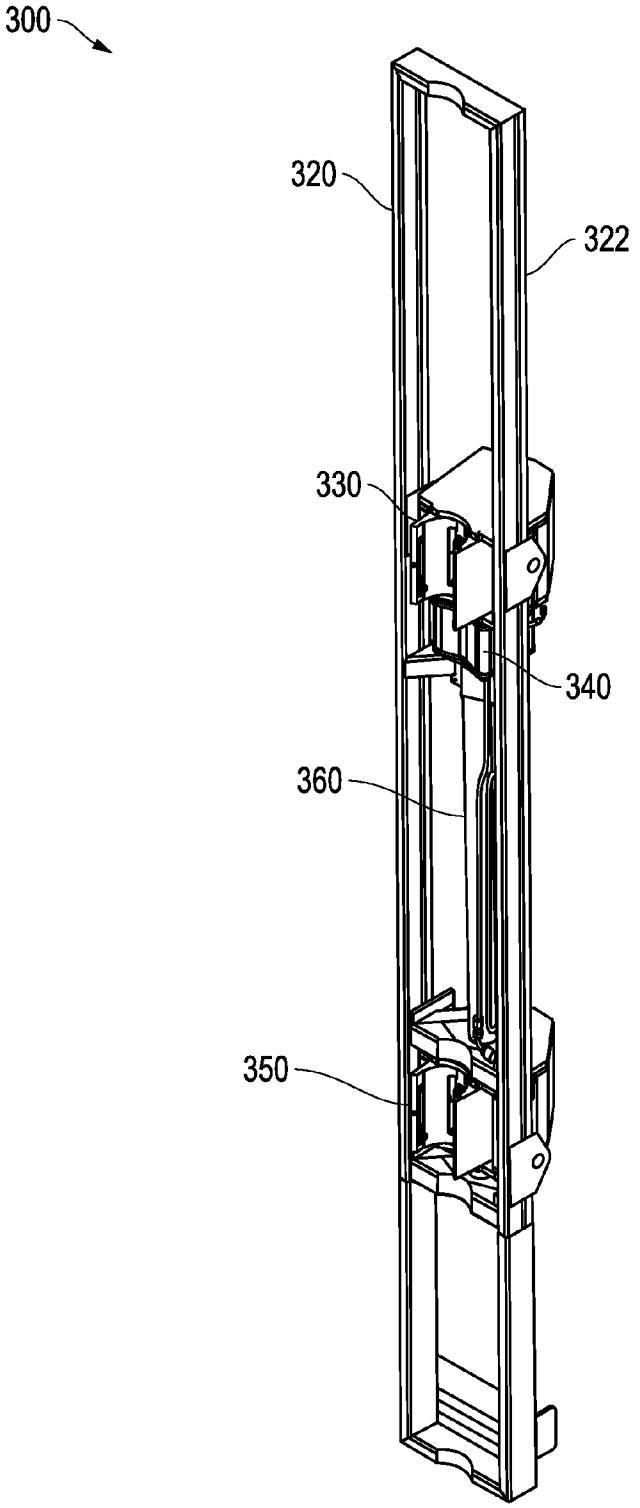

FIG. 10

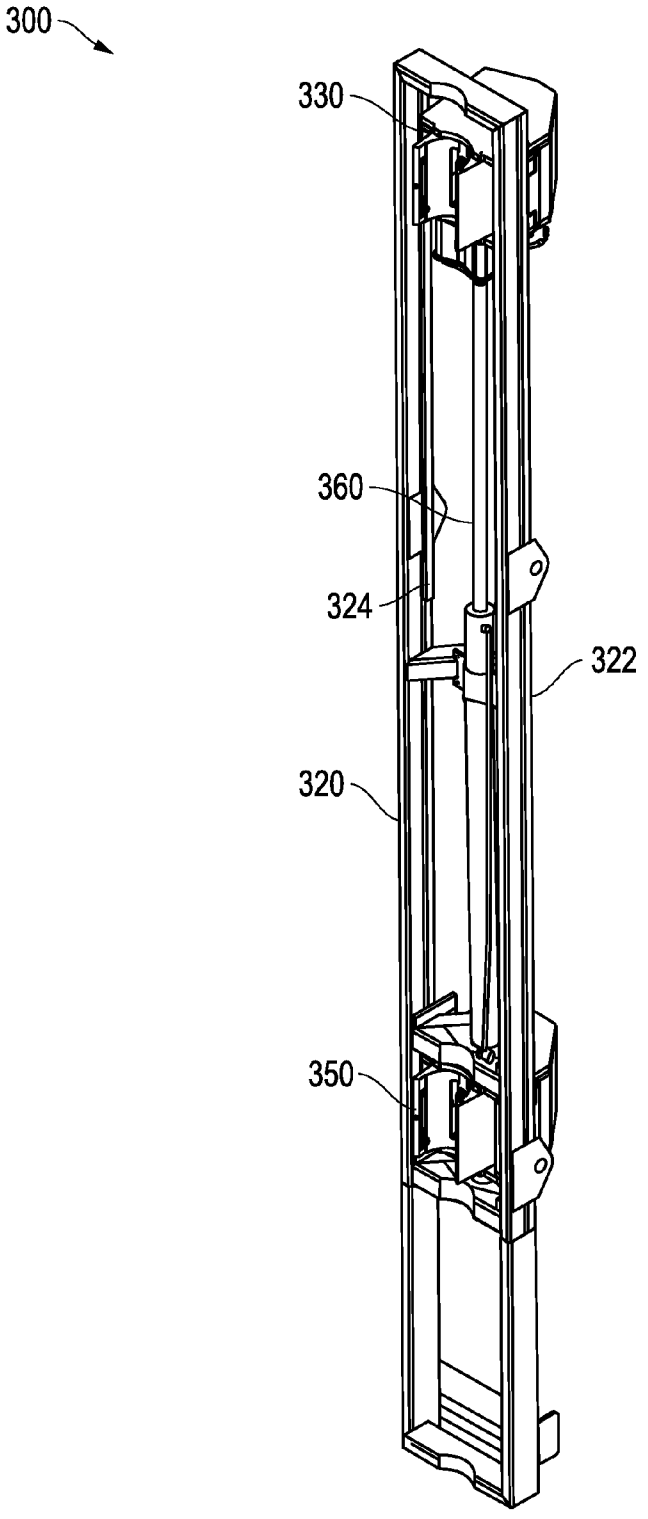

FIG. 11

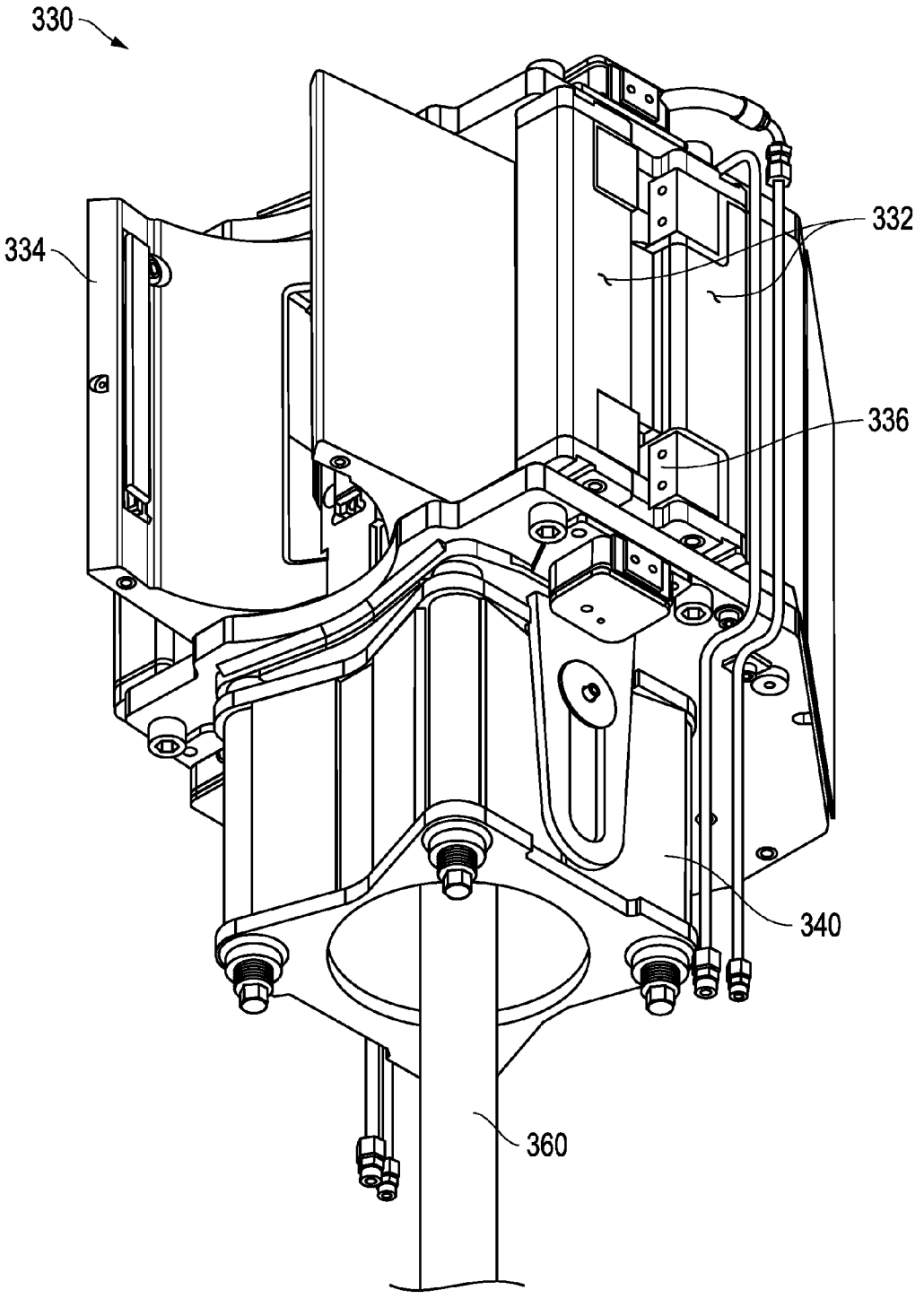

FIG. 12

GRIP AND VERTICAL STAB APPARATUS AND METHOD

CROSS-REFERENCE TO RELATED U.S. APPLICATIONS

The present application is a continuation-in-part of U.S. patent application Ser. No. 12/632,261 filed Dec. 7, 2009, now U.S. Pat. No. 8,408,334, which claims the benefit of U.S. Provisional Patent Application No. 61/121,838 filed Dec. 11, 2008.

BACKGROUND OF THE INVENTION

1. Field of the Invention

The present invention relates to tubular handling apparatus. Particularly, the present invention relates to tubular handling apparatus having a main rotating structural member pivoting between a first and a second position. Additionally, the present invention relates to tubular handling apparatus having grippers attached to a stab frame. More particularly, the present invention relates to grippers that translate along the side of the stab frame as the main rotating structural member moves between the first and second positions.

2. Description of Related Art Including Information Disclosed Under 37 CFR 1.97 and 37 CFR 1.98

Drill rigs utilize several methods for transferring tubular members from a pipe rack adjacent to the drill floor to a mousehole in the drill floor or the wellbore for connection to a previously transferred tubular or tubular string. The term "tubular" as used herein is interchangeable with all forms of pipe, drill pipe, drill collars, casing, liner, bottom hole assemblies (BHA), and other types of tubulars known in the art.

Conventionally, drill rigs utilize a combination of the rig cranes and the traveling system for transferring a tubular from the pipe rack to a vertical position above the center of the well. The obvious disadvantage with the prior art systems is that there is a significant manual involvement in attaching the pipe elevators to the tubular and moving the pipe from the drill rack to the rotary table at the well head. This manual transfer operation in the vicinity of workers is potentially dangerous and has caused numerous injuries in drilling operations. Further, the hoisting system may allow the tubular to come into contact with the catwalk or other portions of the rig as the tubular is transferred from the pipe rack to the drill floor. This can damage the tubular and may affect the integrity of the connections between successive tubulars in the well.

One method of transferring pipe from the rack to the well platform comprises tying one end of a line on the rig around a selected pipe on the pipe rack. The pipe is thereafter lifted up onto the platform and the lower end thereof is placed into the mousehole. The mousehole is simply an upright, elongate cylindrical container adjacent to the rotary table which supports the pipe temporarily. When it is necessary to add the pipe to the drill string, slips are secured about the drill string on the rotary table thereby supporting the same in the wellbore. The pipe is disconnected from the traveling equipment, and the elevators, or the kelly, are connected to the pipe in the mousehole. Next, the traveling block is raised by positioning the pipe over the drill string. Tongs are used to secure the pipe to the upper end of the drill string. The drill pipe elevators suspend the drill pipe from a collar, which is formed around one end of the pipe and does not clamp the pipe, thereby permitting rotational pipe movement in order to threadably engage the same to the drill string.

A prior art technique for moving joints of casing from racks adjacent to the drilling rig involves tying a line from the rig onto one end of a selected casing joint on the rack. The line is raised by lifting the casing joint up a ramp leading to the rig platform. As the rope lifts the casing from the rack, the lower end of the casing swings across the platform in a dangerous manner. The danger increases when a floating system is used in connection with drilling. Because the rope is tied around the casing at one end thereof, the casing does not hang vertically, but rather tilts somewhat. A man working on a platform elevated above the rig floor must hold the top of the casing and straighten it out while the casing is threaded into the casing string which is suspended in the wellbore by slips positioned on the rotary table.

It is desirable to be able to grip casing or pipe positioned on a rack adjacent a drilling well, move the same into vertical orientation over the wellbore, and thereafter lower the same onto the string suspended in the wellbore.

In the past, various devices have been created which mechanically move a pipe from a horizontal orientation to a vertical orientation such that the vertically-oriented pipe can be installed into the wellbore. Typically, these devices have utilized several interconnected arms that are associated with a boom. In order to move the pipe, a succession of individual movements of the levers, arms, and other components of the boom must be performed in a coordinated manner in order to achieve the desired result. Typically, a wide variety of hydraulic actuators are connected to each of the components so as to carry out the prescribed movement. A complex control mechanism is connected to each of these actuators so as to achieve the desired movement. Advanced programming is required of the controller in order to properly coordinate the movements in order to achieve this desired result.

Unfortunately, with such systems, the hydraulic actuators, along with other components, can become worn with time. Furthermore, the hydraulic integrity of each of the actuators can become compromised over time. As such, small variations in each of the actuators can occur. These variations, as they occur, can make the complex mechanism rather inaccurate. The failure of one hydraulic component can exacerbate the problems associated with the alignment of the pipe in a vertical orientation. Adjustments of the programming are often necessary so as to continue to achieve the desired results. Fundamentally, the more hydraulic actuators that are incorporated into such a system, the more likely it is to have errors, inaccuracies, and deviations in the desired delivery profile of the tubular. Typically, very experienced and knowledgeable operators are required so as to carry out this pipe movement operation. This adds significantly to the cost associated with pipe delivery.

In the past, pipe handling apparatus have not been used for the installation of casing. The problem associated with casing is that the threads of the casing are formed on an inner wall and on an outer wall at the ends of each of the casing sections. Whenever these threads are formed, the relatively thin wall thickness of the casing is further minimized. Additionally, great precision is required so as to properly thread the threads of one casing section within the threads of an adjacent casing section. The amount of accuracy required for the delivery of the casing by a pipe handling apparatus, in the past, has not been sufficient so as to achieve the desired degree of accuracy for the installation of the casing sections in their threaded connection. The improper installation of one casing section upon another casing section can

potentially damage the threads associated with such casing sections. Additionally, in the past, the pipe handling apparatus could potentially damage the thin-walled casing sections during the delivery. As such, a need has developed to adapt a pipe handling apparatus so as to achieve the desired amount of accuracy for the installation of casing sections.

Various patents have issued relating to tubular handling apparatus. For example, U.S. application Ser. No. 11/923,451, filed on Oct. 24, 2007, discloses a pipe handling apparatus that has a boom pivotally movable between a first position and a second position, a riser assembly pivotally connected to the boom, an arm pivotally connected at one end to the first portion of the riser assembly and extending outwardly therefrom, a gripper affixed to an opposite end of the arm suitable for gripping a diameter of the pipe, a link pivotally connected to the riser assembly and pivotable so as to move relative to the movement of the boom between the first and second positions, and a brace having one end pivotally connected to the boom and an opposite end pivotally connected to the arm between the ends of the arm. The riser assembly has a first portion extending outwardly at an obtuse angle with respect to the second portion. The gripper has a stab frame affixed to an end of the arm, and grippers affixed to the side of the stab frame opposite the arm.

U.S. Pat. No. 3,177,944, issued on Apr. 13, 1965, to R. N. Knights discloses a racking mechanism for earth boring equipment that provides for horizontal storage of pipe lengths on one side of and clear of the derrick. This is achieved by means of a transport arm which is pivoted toward the base of the derrick for swing movement in a vertical plane. The outer end of the arm works between a substantially vertical position in which it can accept a pipe length from, or deliver a pipe length to, a station in the derrick, and a substantially horizontal portion in which the arm can deliver a pipe length to, or accept a pipe length from, a station associated with storage means on one side of the derrick.

U.S. Pat. No. 3,464,507, issued on Sep. 2, 1969, to E. L. Alexander et al. discloses a portable rotary pipe handling system. This system includes a mast pivotally mounted and movable between a reclining transport position to a desired position at the site drilling operations which may be at any angle up to vertical. The mast has guides for a traveling mechanism that includes a block movable up and down the mast through operation of cables reeved from the traveling block over crown block pulleys into a drawwork. A power drill drive is carried by the traveling block. An elevator for drill pipe is carried by an arm swingably mounted relative to the power unit. Power tongs, slips, and slip bushings are supported adjacent the lower end of the mast and adapted to have a drill pipe extend therethrough from a drive bushing connected to a power drive whereby the drill pipe is extended in the direction of the hole to be drilled.

U.S. Pat. No. 3,633,771, issued on Jan. 11, 1972, to Woolslayer et al. discloses an apparatus for moving drill pipe into and out of an oil well derrick. A stand of pipe is gripped by a strongback which is pivotally mounted to one end of a boom. The boom swings the strongback over the rotary table, thereby vertically aligning the pipe stand with the drill string. When both adding pipe to and removing pipe from the drill string, all vertical movement of the pipe is accomplished by the elevator suspended from the traveling block.

U.S. Pat. No. 3,860,122, issued on Jan. 14, 1975, to L. C. Cemosek discloses an apparatus for transferring a tubular member, such as a pipe, from a storage area to an oil well drilling platform. The positioning apparatus includes a pipe positioner mounted on a platform for moving the pipe to a release position whereby the pipe can be released to be lowered to a submerged position. A load means is operably attached or associated with the platform and positioning means in order to move the pipe in a stored position to a transfer position in which the pipe is transferred to the positioner. The positioner includes a tower having pivotally mounted thereon a pipe track with a plurality of pipe clamp assemblies which are adapted to receive a pipe length. The pipe track is pivotally movable by hydraulic power means or gear means between a transfer position in which pipe is moved into the plurality of clamp assemblies and the release position in which the pipe is released for movement to a submerged position.

U.S. Pat. No. 3,986,619, issued on Oct. 19, 1976, to Woolslayer et al. discloses a pipe handling apparatus for an oil well drilling derrick. In this apparatus, the inner end of the boom is pivotally supported on a horizontal axis in front of a well. A clamping means is pivotally connected to the outer end of the boom on an axis parallel to the horizontal axis at one end. The clamping means allows the free end of the drill pipe to swing across the boom as the outer end of the boom is raised or lowered. A line is connected at one end with the traveling block that raises and lowers the elevators and at the other end to the boom so as to pass around sheaves.

U.S. Pat. No. 4,172,684, issued on Oct. 30, 1979, to C. Jenkins discloses a floor level pipe handling apparatus which is mounted on the floor of an oil well derrick suitable structure. This apparatus includes a support that is rockable on an axis perpendicular to the centerline of a well being drilled. One end of an arm is pivotally mounted on the support on an axis transverse to the centerline of the well. The opposite end of the arm carries a pair of shoes having laterally opening pipe-receiving seats facing away from the arm. The free end of the arm can be swung toward and away from the well centerline and the arm support can be rocked to swing the arm laterally.

U.S. Pat. No. 4,403,666, issued on Sep. 13, 1983, to C. A. Willis discloses self-centering tongs and a transfer arm for a drilling apparatus. The clamps of the transfer arm are resiliently mounted to the transfer arm so as to provide limited axial movement of the clamps and thereby of a clamped downhole tubular. A pair of automatic, self-centering, hydraulic tongs is provided for making up and breaking out threaded connections of tubulars.

U.S. Pat. No. 4,407,629, issued on Oct. 4, 1983, to C. A. Willis discloses a lifting apparatus for downhole tubulars. This lifting apparatus includes two rotatably mounted clamps which are rotatable between a side loading-position so as to facilitate the loading and unloading in the horizontal position, and a central position, in which a clamped tubular is aligned with the drilling axis when the boom is in the vertical position. An automatic hydraulic sequencing circuit is provided to automatically rotate the clamps into the side-loading position whenever the boom is pivoted with a downhole tubular positioned in the clamp. In this position, the clamped tubular is aligned with a safety plate mounted on the boom to prevent a clamped tubular from slipping from the clamps.

U.S. Pat. No. 4,492,501, issued on Jan. 8, 1985, to K. M. Haney discloses a platform positioning system for a drilling operation which includes a support structure and a transfer arm pivotally connected to the support structure to rotate about a first axis. This platform positioning system includes a platform which is pivotally connected to the support structure to rotate about a second axis, and rod which is

mounted between the transfer arm and the platform. The position of the arm and platform axes and the length of the rod are selected such that the transfer arm automatically and progressively raises the platform to the raised position by means of the rod as the transfer arm moves to the raised position. The transfer arm automatically and progressively lowers the platform to the lowered position by means of the rod as the transfer arm moves to the lowered position.

U.S. Pat. No. 4,595,066, issued on Jun. 17, 1986, to Nelmark et al. discloses an apparatus for handling drill pipes and used in association with blast holes. This system allows a drill pipe to be more easily connected and disconnected to a drill string in a hole being drilled at an angle. A receptacle is formed at the lower end of the carrier that has hydraulically operated doors secured by a hydraulically operated lock. A gate near the upper end is pneumatically operated in response to the hydraulic operation of the receptacle lock.

U.S. Pat. No. 4,822,230, issued on Apr. 18, 1989, to P. Slettedal discloses a pipe handling apparatus which is adapted for automated drilling operations. Drill pipes are manipulated between substantially horizontal and vertical positions. The apparatus is used with a top mounted drilling device which is rotatable about a substantially horizontal axis. The apparatus utilizes a strongback provided with clamps to hold and manipulate pipes. The strongback is rotatably connected to the same axis as the drilling device. The strongback moves up or down with the drilling device. A brace unit is attached to the strongback to be rotatable about a second axis.

U.S. Pat. No. 4,834,604, issued on May 30, 1989, to Brittain et al. discloses a pipe moving apparatus and method for moving casing or pipe from a horizontal position adjacent a well to a vertical position over the wellbore. The machine includes a boom movable between a lowered position and a raised position by a hydraulic ram. A strongback grips the pipe and holds the same until the pipe is vertically positioned. Thereafter, a hydraulic ram on the strongback is actuated, thereby lowering the pipe or casing onto the string suspended in the wellbore and the additional pipe or casing joint is threaded thereto.

U.S. Pat. No. 4,708,581, issued on Nov. 24, 1987, H. L. Adair discloses a method for positioning a transfer arm for the movement of drill pipe. A drilling mast and a transfer arm are mounted at a first axis adjacent the mast to move between a lowered position near ground level and an upper position aligned with the mast. A reaction point anchor is fixed with respect to the drilling mast and spaced from the first axis. A fixed length link is pivotally mounted to the transfer arm at a second axis, spaced from the first axis, and a first single stage cylinder is pivotally mounted at one end to the distal end of the link and at the other end to the transfer arm. A second single stage hydraulic cylinder is pivotally mounted at one end to the distal end of the link and at the other end to the reaction point.

U.S. Pat. No. 4,759,414, issued on Jul. 26, 1988, to C. A. Willis discloses a drilling machine which includes a drilling superstructure skid which defines two spaced-apart parallel skid runners and a platform. The platform supports a drawworks mounted on a drawworks skid, and a pipe boom is mounted on a pipe boom skid sized to fit between the skid runners of the drilling substructure skid. The drilling substructure skid supports four legs which, in turn, support a drilling platform on which is mounted a lower mast section. The pipe boom skid mounts a pipe boom as well as a boom linkage, a motor, and a hydraulic pump adapted to power the pipe boom linkage. Mechanical position locks hold the upper skid in relative position over the lower skid.

U.S. Pat. No. 5,458,454, issued on Oct. 17, 1995, to R. S. Sorokan discloses a pipe handling method which is used to move tubulars used from a horizontal position on a pipe rack adjacent the wellbore to a vertical position over the wall center. This method utilizes bicep and forearm assemblies and a gripper head for attachment to the tubular. The path of the tubular being moved is close to the conventional path of the tubular utilizing known cable transfer techniques so as to allow access to the drill floor through the V-door of the drill rig. U.S. Pat. No. 6,220,807 describes an apparatus for carrying out the method of U.S. Pat. No. 5,458,454.

U.S. Pat. No. 6,609,573, issued on Aug. 26, 2003, to H.W.F. Day discloses a pipe handling system for an offshore structure. The pipe handling system transfers the pipes from a horizontal pipe rack adjacent to the drill floor to a vertical orientation in a set-back area of the drill floor where the drill string is made up for lowering downhole. The cantilevered drill floor is utilized with the pipe handling system so as to save platform space.

U.S. Pat. No. 6,705,414, issued on Mar. 16, 2004, to Simpson et al. discloses a tubular transfer system for moving pipe between a substantially horizontal position on the catwalk and a substantially vertical position at the rig floor entry. Bundles of individual tubulars are moved to a process area where a stand make-up/break-out machine makes up the tubular stands. The bucking machine aligns and stabs the connections and makes up the connection to the correct torque. The tubular stand is then transferred from the machine to a stand storage area. A trolley is moved into position over the pick-up area to retrieve the stands. The stands are clamped to the trolley and the trolley is moved from a substantially horizontal position to a substantially vertical position at the rig floor entry. A vertical pipe-racking machine transfers the stands to the traveling equipment. The traveling equipment makes up the stand connection and the stand is run into the hole.

U.S. Pat. No. 6,779,614, issued on Aug. 24, 2004, to M. S. Oser discloses another system and method for transferring pipe. A pipe shuttle is used for moving a pipe joint into a first position and then lifting upwardly toward an upper second position.

In well drilling and well completion operations, it is necessary to lift and properly align lengths of downhole tubulars. For example, in oil or water well drilling, multiple lengths of drill pipe must often be raised from a horizontal position at or near ground level to a vertical position aligned with the centerline of the well. Such lifting and aligning operations require clamps for securely holding the pipe in place as it is lifted. When a pivotally mounted pipe boom is used, this boom must support large loads in several different orientations.

Compounding this problem is the fact that each joint of a length of a downhole tubular must be closely aligned with a string of such tubulars after it has been lifted to the vertical position, such as when a drill pipe or casing is made up. A clamp, or gripper, for this purpose should preferably provide a necessary alignment for downhole tubulars having various diameters, without any adjustment. Proper alignment has been a problem with many such clamps, or grippers, of the prior art, especially those employing pivoted clamping jaws. When pivoted clamping jaws are used, there is a tendency for the center of the downhole tubular to vary as a function of the diameter of the tubular being clamped.

Various patents and patent applications relate to grippers of tubular handling apparatus. For example, U.S. patent application Ser. No. 12/111,907, filed on Apr. 29, 2008, by the present inventor, discloses a pipe gripping apparatus

having a first jaw with a pipe-contacting surface at one end thereof, a second jaw having a pipe-contacting surface at one end thereof, a tongue having a pipe-contacting surface at one end thereof, and an actuator connected to the first and second jaws and to the tongue. The actuator serves to move the first and second jaws and the tongue such that the pipe-contacting surfaces thereof move radially inwardly simultaneously for a substantially identical distance. A first link pivotally connects the tongue with the first jaw. A second link pivotally connects the tongue with the second jaw. The first and second links extend angularly outwardly from the tongue. The first and second pivot points of each jaw have a distance unequal to a distance between the first pivot point and pipe-contacting surface of each jaw. The pipe-contacting surfaces can be elastomeric pads, toothed dies, or rollers.

U.S. Pat. No. 3,280,920, issued on Oct. 25, 1966, to P. Scott discloses a portable apparatus for drilling downhole wells. This apparatus has a mast having an open side and a means for supporting a string of drill pipes rotated within the mast. A means for raising and lowering a string of drill pipes in a rectilinear direction parallel to the longitudinal centerline of the mast is provided. This apparatus includes a hydraulic cylinder connected through a suitable arrangement of lines and sheaves so as to apply positive force upon the power swivel so as to move the swivel upwardly or downwardly in the mast as desired. This swivel is mounted on a wheeled carriage which runs on suitable tracks carried by the mast. An elongate frame is pivotably attached to the lower end of the mast for swinging movement to an open side of the mast between a substantially horizontal position and an upright position. Releasable clamps are adapted to grip a section of drill pipe mounted on the frame for a limited longitudinal reciprocating motion thereon.

U.S. Pat. No. 3,365,762, issued on Jan. 30, 1968, to W. H. Spiri discloses a well pipe gripping structure having a slip body having a pipe gripping insert which is slidably movable horizontally into an arcuate guideway in the slip body. The slip body is retained within the guideway by upper and lower lips on the body. The lips have asymmetric retaining surfaces. The inserts are provided with teeth which advance vertically as the teeth advance circularly. The teeth of one insert are positioned out of alignment with the teeth of the other insert to increase the resistance to rotation of the pipe within the slip structure.

U.S. Pat. No. 3,561,811, issued on Feb. 9, 1971, to J. W. Turner, Jr. discloses a well drilling rig having a pipe racker apparatus in which a number of racker arms are controllable from a remote location to engage drill pipe tool joints and drill collars. One of the arms has a head for supporting the weight of lengths of pipe or drill collars being added to or removed from the drill string.

U.S. Pat. No. 3,702,640, issued on Nov. 14, 1972, to Cintract et al. discloses a tipping girder with a transfer of tubular elements. This tipping girder has a plurality of adjustable guide nippers movably positioned on the girder for movement transverse to the longitudinal axis thereof. There are adjustable locking nippers movably mounted on the girder for movement parallel to and transverse to the longitudinal axis thereof. The locking nippers are constructed to automatically engage and lock a rod on the girder when it is moved away from the horizontal position.

U.S. Pat. No. 3,806,021, issued on Apr. 23, 1974, to Moroz et al. discloses a pipe centering apparatus. This apparatus has a carriage with a column mounted thereon to support a pipe end jointing mechanism. The carriage has a receptacle together with the column. The column pivotally supports a cantilever member of which the free extremity pivotably supports the pipe end jointing mechanism including coaxially arranged grippers adapted to retain the ends of the pipe.

U.S. Pat. No. 4,303,270, issued on Dec. 1, 1981, to H. L. Adair discloses a self-centering clamp for downhole tubulars. This clamp includes first and second opposed clamping members guided along a clamping axis by first and second guide channels defined by a frame. Each clamping member defines a hydraulic cylinder in which is disposed a piston which is rigidly mounted to the frame. A rack is coupled to move with each of the clamping members. These racks are interconnected via a pinion gear which meshes with both racks so that the two clamping members move in a counter-directional manner and remain equidistant from a central point on the clamping axis.

U.S. Pat. No. 4,403,897, issued on Sep. 13, 1983, to C. A. Willis discloses a self-centering clamp for drilling tubulars. This self-centering clamp includes first and second transverse guide rods. Two opposed clamping jaws are guided along the first guide rod. These jaws are positioned by two opposed rocker arms, each of which is mounted to a cross brace which slides along the second guide rod. The rocker arms are symmetrically positioned by a link mechanism which also slides along the second guide rod and by a hydraulic cylinder coupled between the two rocker arms. The frame is pivotably mounted to a pipe boom so as to rotate about an axis parallel to the clamped pipe and transverse to the first and second guide rods.

U.S. Pat. No. 4,650,237, issued on Mar. 17, 1987, to R. J. Lessway discloses an automatic centering and gripping apparatus which includes a housing in which is slidably mounted on a longitudinal movable operator body. A pair of gripper arms is slidably mounted on the operator body. Each gripper arm carries a gripper member engageable with a workpiece. The gripper members are moved longitudinally and laterally into gripping engagement with a workpiece when the operator body is moved in one longitudinal direction. They are correspondingly disengaged from the workpiece when the operator body is moved in the other longitudinal direction.

U.S. Pat. No. 5,609,226, issued on Mar. 11, 1997, to D. J. Penisson discloses a slip-type gripping assembly having an outer body defining a longitudinal through opening for receipt of the object. A number of slip bodies are circumferentially spaced about the through opening and are radially movable toward and away from the locus of the object. Each slip body is pivotable about a generally longitudinal axis and generally circumferentially centered with respect to the slip body as well as about a tangential axis. A respective force transfer formation is cooperative between each slip body and the outer body for transferring radial force therebetween while permitting the pivoting.

U.S. Pat. No. 5,848,647, issued on Dec. 15, 1998, to Webre et al. discloses a pipe gripping apparatus for angularly adapting two misaligned pipes on one or more pipe strings. The apparatus has a housing having internal, opposing downwardly-curved surfaces therein and forming a longitudinal opening for passing a portion of at least one tubing string therethrough. A plurality of slip carriers each has an exterior surface contoured to match the downwardly curved surface and has a downwardly inclined interior surface. Each slip carrier is in movable connection with one of the curved surfaces of the housing. A plurality of slips has downwardly inclined exterior surfaces and longitudinal channels formed on an internal surface for holding gripping elements for gripping a portion of the pipe.

U.S. Pat. No. 5,992,801, issued on Nov. 30, 1999, to C. A. Torres discloses a pipe gripping assembly and method. This pipe gripping assembly has a primary pipe gripping mechanism and a backup and a secondary pipe gripping mechanism carried in a single tapered slip bowl. The primary gripping mechanism employs smooth surface pipe dies that set against and grip and hold the pipe without damaging the pipe surface. After the primary mechanism is set, toothed dies in the secondary gripping mechanism are automatically engaged with the pipe with only a minimal pipe gripping force. Additional slippage of the pipe through the smooth dies sets the toothed dies down against a wedging surface to grip and hold the pipe to stop its downward movement. A resilient biasing device is used to urge the toothed dies away from the pipe before the smooth dies are set.

U.S. Pat. No. 5,993,140, issued on Nov. 30, 1999, to A. Crippa discloses an apparatus for loading pipes onto processing machines. This apparatus has a handler arm with a first segment and a second segment disposed in succession. Kinematic members are adapted to determine a fixed ratio between the rotation angles of the segments about the respective hinging axes.

U.S. Pat. No. 6,543,551, issued Apr. 8, 2003, to Sparks et al. discloses an automatic pipe handling device which includes a support frame mounted on a boring device. Removable pipe racks can be placed in position on the support frame to deliver pipe to the spindle axis or to remove pipe therefrom as required. The pipe sections are removed from the pipe rack and positioned on the spindle axis by pipe grippers mounted on hydraulic cylinders mounted on a rotating longitudinal shaft. The grippers and shaft simultaneously return the used pipe sections for storage to the pipe rack.

U.S. Pat. No. 6,543,555, issued on Apr. 8, 2003, to M. Casagrande discloses an automatic loader for drill rods adapted to be used in association with a boring machine. The automatic motor has a store containing a plurality of drill rods and a movement assembly that is able to selectively remove, one at a time, the drill rods from the store to position them on the guide and drive assembly. The movement assembly is arranged in an intermediate position between the store and the guide and drive assembly so as to not interfere with the latter during the removal of the drill rods from the store.

U.S. Pat. No. 6,845,814, issued on Jan. 25, 2005, to Mason et al. discloses a pipe-gripping structure having load rings. In particular, a rotary slip supports a drill string having a plurality of slip segments connected to define an opening for insertion of the drill string. Each slip segment has a head region, a toe region, and an inner radial surface axially extending between the head and toe regions. The inner radial surface of each slip segment has a circumferential groove. A plurality of axially aligned drill string gripping inserts is attached to each slip segment between the head region and the circumferential groove. Each insert has a gripping surface for contacting the drill string.

U.S. Pat. No. 7,055,594, issued on Jun. 6, 2006, to Springett et al. discloses a pipe gripper and top drive system in which the pipe gripping system is located beneath the top drive unit. The pipe gripping system has an open throat for receiving a tubular to be gripped by the pipe gripping system. The gripping system has a body with first and second jaws movably connected thereto and a piston/cylinder assembly movably interconnected with each jaw for moving the jaws to clamp and then to rotate the pipe.

U.S. Pat. No. 7,090,035, issued on Aug. 15, 2006, to G. Lesko discloses a method and system for connecting pipe to a top drive motor. This system includes a top drive motor that tilts about a horizontal axis and a pipe launcher that brings joints of pipe up to the drilling platform for connection with a top drive motor at a safe and convenient height above the platform. The top drive motor further includes a clamping assembly that grasps and pulls the joint of the pipe to the motor as the connection is being made. The clamp assembly supports the motor-pipe connection as the top-drive motor is raised in the drilling mast of the rig, bringing the joint of pipe up into a vertical orientation for connection with the drill tubing string.

U.S. Pat. No. 7,121,166 B2, issued on Oct. 17, 2006, to Drzewiecki discloses a tong assembly that has a body and a center member slidable relative to the body. A pair of clamping arms is rotatably connected to the body. The clamping arms are connected to the center member such that as the center member slides relative to the body, the clamping arms rotate relative to the body. The assembly also comprises a plurality of die assemblies, wherein at least one die assembly is mounted to each clamping arm and at least one die assembly is mounted to the center member.

A problem associated with prior art tubular handling apparatus is that the size of the main rotating structural member of the apparatus can limit the size of the tubular that is moved from a horizontal to a vertical position and vice versa. The tubulars can also be too long to fit within the V-door of an oil derrick. Tubulars can also be too large and too long to fit or pass by various other equipment associated with oil and gas drilling and production. The tubular may have a length that makes it difficult to pass through the opening in the boom, or main rotating structural member, of the tubular handling apparatus. Thus, there is a need to manipulate a position of a tubular that is gripped by a tubular handling apparatus so as to overcome these limitations.

It is an object of the present invention to deliver tubulars to and from a well head.

It is another object of the present invention to change a position of a tubular held by a tubular gripping apparatus while the apparatus moves between a first position and a second position.

It is still another object of the present invention to move tubulars vertically upward and downward above a well head.

It is another object of the present invention to manipulate a position of a tubular with the grippers of a tubular handling apparatus.

It is another object of the present invention to provide correct alignment of tubulars over a well head.

It is another object of the present invention to provide an apparatus that allows relatively unskilled workers to carry out tubular handling activities.

It is still another object of the present invention to provide an apparatus that has grippers that translate along a side of the stab frame of the apparatus.

It is a further object of the present invention to provide a tubular handling apparatus that facilitates the ability to introduce and/or remove the tubular through a V-door of a drilling rig.

These and other objects and advantages of the present invention will become apparent from a reading of the attached specification and appended claims.

BRIEF SUMMARY OF THE INVENTION

The present invention includes a tubular handling apparatus comprising a main rotating structural member pivotally movable between a first position and a second position, an arm interconnected to the main rotating structural member

so that the arm is suitable for pivoting between a home position and an extended position, a frame connected to an end of the arm opposite the main rotating structural member, and at least a pair of grippers affixed to an end of the arm opposite the main rotating structural member. The grippers grip a surface of a tubular and are suitable for translating along a side of the frame.

The pair of grippers has a connection bar connected to the pair of grippers and extends therebetween. The connection bar is suitable for translating the grippers for a substantially identical distance with respect to each other along the side of the frame.

The apparatus further comprises a means of translating the grippers along the side of the frame. The means for translating comprises a first translating mechanism positioned between the side of the frame and the first gripper, a second translating mechanism positioned between the side of the stab frame and the second gripper, and tracks formed on the side of the stab frame. The means for translating moves the first gripper and the second gripper along the tracks.

The first gripper and the second gripper are suitable for translating along the side of the stab frame while the arm pivots between the home position and the extended position. The arm is connected to an opposite side of the stab frame. The first gripper and the second gripper are suitable for translating along the side of the stab frame while the main rotating structural member pivots between the first position and the second position.

Each of the first and second grippers comprises a first jaw having a tubular-contacting surface at an end thereof, a second jaw having a tubular-contacting surface at an end thereof, a drive yoke having a tubular-contacting surface at an end thereof, and an actuator means connected to the drive yoke. The drive yoke is connected to the first jaw and to the second jaw. The actuator means moves the first and second jaws and the drive yoke such that the tubular-contacting surfaces thereof move radially inwardly for a substantially identical distance. Each of the first and second grippers further comprises a first link connected to the first jaw and to the drive yoke, and a second link connected to the second jaw and to the drive yoke. The first link is pivotally connected at a first pivot point to the first jaw. The first link is pivotally connected at a second pivot point to the drive yoke. The second link is pivotally connected at a first pivot point to the second jaw. The second link is pivotally connected at a second pivot point to the drive yoke. The first link is positioned between the first jaw and the drive yoke. The second link is positioned between the second jaw and the drive yoke.

The tubular handling apparatus can further comprise a lever assembly pivotally connected to the main rotating structural member where the lever assembly has a first portion extending outwardly at an obtuse angle with respect to a second portion, a skid extending in a horizontal orientation below the main rotating structural member, a link pivotally connected to the second portion of the lever assembly, and a brace having an end pivotally connected to the main rotating structural member and an opposite end pivotally connected to the arm. The link pivots at an end of the second portion opposite the first portion so as to move relative to a movement of the main rotating structural member between the first position and the second position. The arm is pivotally connected at one end to the first portion of the lever assembly and extends outwardly therefrom. The main rotating structural member is pivotally mounted on the skid.

BRIEF DESCRIPTION OF THE SEVERAL VIEWS OF THE DRAWINGS

FIG. **1** shows an isolated perspective view of the gripper means of the preferred embodiment of the tubular handling apparatus of the present invention.

FIG. **2** shows an isolated perspective view of the gripper means of the preferred embodiment of the tubular handling apparatus with the grippers translated downwardly along the side of the stab frame.

FIG. **3** shows a side elevational view of the preferred embodiment of the tubular handling apparatus.

FIG. **4** shows a side elevational view of the tubular handling apparatus in the first position.

FIG. **5** shows a side elevational view of the tubular handling apparatus moving from the first position to the second position.

FIG. **6** shows a side elevational view of the tubular handling apparatus moving further from the first position to the second position.

FIG. **7** shows a side elevational view of the tubular handling apparatus in the second position.

FIG. **8** shows a plan view of a gripper of the tubular handling apparatus of the present invention.

FIG. **9** is an isometric exploded view of an alterative embodiment of the tubular handling apparatus.

FIG. **10** is an isometric view of the embodiment of the invention of FIG. **9**, illustrated with the stabbing gripper in the extended position in the stabbing frame.

FIG. **11** is an isometric view of the embodiment of the invention of FIGS. **9** and **10**, illustrated with the stabbing gripper in the retracted position in the stabbing frame.

FIG. **12** is a close up view of the embodiment of the invention of FIGS. **9-11**, illustrating an embodiment of the guide assembly and load transition spring assembly (LTSA) features of the invention.

DETAILED DESCRIPTION OF THE INVENTION

Referring to FIG. **1**, there is shown an isolated perspective view of the gripper assembly **26** of the present invention. The gripper assembly **26** has a stab frame **28**, a first gripper **30** attached to a side **116** of the stab frame **28**, and a second gripper **32** attached to the side **116** of the stab frame **28** below the first gripper **30**. The stab frame **28** has an opposite side **103** connected to the arm of the tubular handling apparatus. The stab frame **28** has an end **100** and an opposite end **102**. The grippers **30** and **32** translate along a track **114** between the ends **100** and **102** of the stab frame **28**. The track **114** is formed on the side **116** of the stab frame **28**.

A means for translating **118** is positioned between the side **116** of the stab frame **28** and each of the first and second grippers **30** and **32**. The means for translating moves the grippers **30** and **32** relative to the side **116** of the stab frame **28**. The means for translating **118** has a first translating mechanism **121** and a second translating mechanism **123**. The first translating mechanism **121** is positioned between the side **116** of the stab frame **28** and the first gripper **30**. The second translating mechanism **123** is positioned between the side **116** of the stab frame **28** and the second gripper **32**. The first and second translating mechanisms **121** and **123** travel along tracks **114** so as to move the grippers **30** and **32** along the side **116** of the stab frame **28**. The first gripper **30** is connected to the second gripper **32** by connection bar **119**. The connection bar **119** connects the top of the second gripper **32** with the bottom of the first gripper **30**. The

connection bar **119** causes the first and second grippers **30** and **32** to translate along the side **116** of the stab frame **28** for substantially identical distances. The connection bar **119** also causes the grippers **30** and **32** to travel in the same direction.

As used herein, the term "means for translating" can encompass a wide variety of operational mechanisms. A pneumatic or hydraulic cylinder, or several cylinders, can be connected to at least one of the grippers **30** and **32** so as to translate the grippers along the side of the stab frame **28**. Alternatively, a geared mechanism with a motor can be used so as to drive the grippers **30** and **32** along the side of the stab frame **28**. Still further, each of the grippers **30** and **32** can be connected to a driven pinion that rides along a rack positioned within this stab frame **28**. It was possible that a cable can be connected to one of the grippers to extend over a pulley mechanism in order to lift and lower the grippers. Various other techniques can also be employed in order to achieve this translatable movement of the grippers **30** and **32**.

The first gripper **30** has jaws **122** that grip an outer surface **105** of the tubular **18**. Likewise, the second gripper **32** has jaws **124** that grip the outer surface **105** of the tubular **18**. The jaws **124** of the second gripper **32** and the jaws **122** of the first gripper **30** are in generally vertical alignment so that the tubular **18** is held relatively parallel to the side **116** of the stab frame **28**. The grippers **30** and **32** travel between the ends **101** and **102** of the stab frame **28**. As is disclosed in the present invention, the grippers **30** and **32** travel while the tubular handling apparatus pivots between the first and second positions (discussed in more detail below).

Referring to FIG. **2**, there is shown an isolated perspective view of the gripper assembly **26** of the tubular handling apparatus of the present invention, with the first and second grippers **30** and **32** translated downwardly along the side **116** of the stab frame **28**. The first translating mechanism **121** and the second translating mechanism **123** cause the first and second grippers **30** and **32**, respectively, to travel along the tracks **114** toward end **100** of the stab frame **28** away from end **102** of the stab frame **28**. The connection bar **119** that connects the top of the second gripper **32** with the bottom of the first gripper **30** cause the first and second grippers **30** and **32** to travel for substantially identical distances. The jaws **122** of the first gripper **30** and the jaws **124** of the second gripper **32** grip the outer surface **105** of the tubular **18** while the grippers **30** and **32** travel along the tracks **114**. The means for translating **118** enables the grippers **30** and **32** to travel between the ends **100** and **102** of the stab frame **28** independently of the travel of the tubular handling apparatus between the first and second positions.

Referring to FIG. **3**, there is shown a side elevational view of the preferred embodiment of the tubular handling apparatus **10** of the present invention. The tubular handling apparatus **10** is mounted on a skid **12** that is supported upon the bed **14** of a vehicle, such as a truck. The tubular handling apparatus **10** includes a main rotating structural member **16** that is pivotally movable between a first position and a second position. In FIG. **3**, an intermediate position of the tubular handling apparatus **10** is particularly shown. In this position, the tubular **18** is illustrated in its position prior to installation on the drill rig **20**. A lever assembly **22** is pivotally connected to the main rotating structural member **16**. An arm **24** is pivotally connected to an end of the lever assembly **22** opposite the main rotating structural member **16**. The arm **24** has a home position and an extended position, and in FIG. **3**, the arm **24** is shown in a position between the home position and the extended position. The home position of the arm **24** can be seen in FIG. **4** below. The extended position of the arm **24** can be seen in FIG. **7** below. A gripper assembly **26** is fixedly connected to an end of the arm **24** opposite the lever assembly **22**. The gripper assembly **26** includes a stab frame **28** and grippers **30** and **32**. A link **34** has one end pivotally connected to the skid **12** and an opposite end pivotally connected to the end of the lever assembly **22** opposite the arm **24**. A brace **36** is pivotally connected to the main rotating structural member **16** and also pivotally connected to the arm **24** between the lever assembly **22** and the stab frame **28** of gripper assembly **26**.

In the present invention, the main rotating structural member **16** is a structural framework of struts, cross members and beams. In particular, in the present invention, the main rotating structural member **16** is configured so as to have an open interior such that the tubular **18** will be able to be lifted in a manner so as to pass through the interior of the main rotating structural member **16**. As such, the end **38** of the main rotating structural member **16** should be strongly reinforced so as to provide the necessary structural integrity to the main rotating structural member **16**. A lug **40** extends outwardly from one side of the main rotating structural member **16**. This lug **40** is suitable for pivotable connection to the lever assembly **22**. The main rotating structural member **16** is pivotally connected at the opposite end **42** to a location on the skid **12**. The pivotable connection at end **42** of the main rotating structural member **16** is located in offset relationship and above the pivotable connection **44** of the link **34** with the skid **12**. A small frame member **46** extends outwardly from the side of the main rotating structural member **16** opposite the link **34**. This frame assembly **46** has a pivotable connection with the brace **36**.

The lever assembly **22** includes a first portion **48** and a second portion **50**. The first portion **48** extends at an obtuse angle with respect to the second portion **50**. The link **34** is pivotally connected to the end of the second portion **50** opposite the first portion **48**. The arm **24** is pivotally connected to the end of the first portion **48** opposite the second portion **50**. The lug **40** of the main rotating structural member **16** is pivotally connected in an area generally between the first portion **48** and the second portion **50**. This unique arrangement of the lever assembly **22** facilitates the ability of the present invention to carry out the movement of the tubular **18** between the horizontal orientation and the vertical orientation.

The arm **24** has an end pivotally connected to the end of the first portion **48** of the lever assembly **22**. The opposite end of the arm **24** is connected to the gripper assembly **26**. In particular, a pair of pin connections engages a surface of the body **28** of the gripper assembly **26** so as to fixedly position the gripper assembly **26** with respect to the end of the arm **24**. The pin connections **52** and **54** can be in the nature of bolts, or other fasteners, so as to strongly connect the stab frame **28** of the gripper assembly **26** with the arm **24**. The bolts associated with pin connections **52** and **54** can be removed such that other gripper assembly **26** can be affixed to the end of the arm **24**. As such, the tubular handling apparatus **10** of the present invention can be adaptable to various sizes of tubular **18** and various heights of drilling rigs **20**.

The gripper assembly **26** includes the stab frame **28** with the grippers **30** and **32** translatable along the length of the stab frame **28**. This vertical translation of the grippers **30** and **32** allows the tubular **18** to be properly moved upwardly and downwardly once the vertical orientation of the tubular **18** is achieved. The grippers **30** and **32** are in the nature of

conventional grippers which can open and close so as to engage the outer surface of the tubular **18**, as desired.

The link **34** is an elongate member that extends from the pivotable connection **44** to the pivotable connection **68** of the second portion **50** of the lever assembly **22**. The link **34** is non-extensible and extends generally adjacent to the opposite side from the main rotating structural member **16** from that of the arm **24**. The link **34** will generally move relative to the movement of the main rotating structural member **16**. The brace **36** is pivotally connected to the small framework **46** associated with main rotating structural member **16** and is also pivotally connected at a location along the arm **26** between the ends thereof. Brace **36** provides structural support to the arm **24** and also facilitates the desired movement of the arm **24** during the movement of the tubular **18** between the horizontal orientation and the vertical orientation.

Actuators **56** and **58** are illustrated as having one end connected to the skid **12** and an opposite end connected to the main rotating structural member **16** in a location above the end **42**. When the actuators **56** and **58** are activated, they will pivot the main rotating structural member **16** upwardly from the horizontal orientation ultimately to a position beyond vertical so as to cause the tubular **18** to achieve a vertical orientation. Within the concept of the present invention, a single hydraulic actuator can be utilized instead of the pair of hydraulic actuators **56** and **58**, as illustrated in FIG. **3**.

The drilling rig **20** is illustrated as having drill pipes **60** and **62** extending upwardly so as to have an end above the drill floor **64**. When the tubular **18** is in its vertical orientation, the translatable movement of the grippers **30** and **32** can be utilized so as to cause the end of the tubular **18** to engage with the box of one of the drill pipes **60** and **62**.

In FIG. **3**, the general movement of the bottom end of the tubular **18** is illustrated by line **66**. The movement of the pivot point **68** of the connection between the lever assembly **22** and the link **34** is illustrated by line **70**. Curved line **71** illustrates the movement of the pivotable connection **40** between the main rotating structural member **16** and the lever assembly **22**.

In the present invention, the coordinated movement of each of the non-extensible members of the apparatus **10** is achieved with proper sizing and angular relationships. In essence, the present invention provides a four-bar link between the various components. As a result, the movement of the tubular **18** between a horizontal orientation and a vertical orientation can be achieved purely through the mechanics associated with the various components. As can be seen, only a single hydraulic actuator may be necessary so as to achieve this desired movement. There does not need to be coordinated movement of hydraulic actuators. The hydraulic actuators are only used for the pivoting of the main rotating structural member **16**. Because the skid **12** is located on the bed of a vehicle **14**, the vehicle **14** can be maneuvered into place so as to properly align with the centerline of the drill pipes **60** and **62** of the drilling rig **20**. Once the proper alignment is achieved by the vehicle **14**, the apparatus **10** can be operated so as to effectively move the drill pipe to its desired position. The gripper assemblies of the present invention allow the tubular **18** to be moved upwardly and downwardly for the proper stabbing of the drill pipes **60** and **62**. The present invention is adaptable to various lengths of tubulars **18**.

The position of the tubular handling apparatus **10** as shown in FIG. **3** is that the apparatus **10** is between the first and second positions, with the apparatus **10** being closer to the second position than the first position. The first and second grippers **30** and **32** of the gripper assembly **26** are traveling between the ends **100** and **102** of the stab frame **28** while the apparatus **10** moves toward the second position. Because the apparatus **10** is near the second position, the grippers **30** and **32** are closer to the end **102** of the stab frame **28** than to end **100** of the stab frame **28**.

As such, instead of the complex control mechanisms that are required with prior art systems, the present invention achieves its results by simple maneuvering of the vehicle **14**, along with operation of the hydraulic cylinders **56** and **58**. All other linkages and movement of the pipe **18** are achieved purely because of the mechanical connections between the various components, as well as the translation of grippers **30**, **32** along track **114**. As such, the present invention assures a precise, self-centering of the pipe **18** with respect to the desired connecting pipe. This is accomplished with only a single degree of freedom in the pipe handling system.

Referring to FIG. **4**, there is shown a side elevational view of the apparatus **10** of the present invention in the first position, with the drill tubular **18** in a generally horizontal orientation. The main rotating structural member **16** is in the first position, which is a horizontal orientation. The arm **24** is in a home position. In the disclosed invention, the drill tubular **18** is delivered to the grippers **30** and **32** of the gripper assembly **26** in a position below the main rotating structural member **16**. In particular, the drill pipe **18** can be loaded upon the skid **12** in a location generally adjacent to the grippers **30** and **32** associated with the gripper assembly **26**. As such, the present invention facilitates the easy delivery of the drill pipe **18** to the desired location. The grippers **30** and **32** grip the outer surface of the tubular **18** in this horizontal orientation.

In FIG. **4**, it can be seen that the main rotating structural member **16** resides above the tubular **18** and in generally parallel relationship to the top surface of the skid **12**. The lever assembly **22** is suitably pivoted so that the arm **24** extends through the interior of the framework of the main rotating structural member **16** and such that the gripper assembly **26** engages the tubular **18**. The brace **36** resides in connection with the small frame member **46** of the main rotating structural member **16** and also is pivotally connected to the arm **24**. The link **34** will reside below the main rotating structural member **16** generally adjacent to the upper surface of the skid **12** and is connected to the second portion **50** of the lever assembly **22** below the main rotating structural member **16**.

When the apparatus **10** is in the first position, or horizontal position, the grippers **30** and **32** are generally closer to end **100** of the stab frame **28** than they are to end **102** of the stab frame **28**. In FIG. **4**, the second gripper **32** is adjacent the end **100** of the stab frame **28**. The grippers **30** and **32** hold the tubular **18** in a position so that it clears the framework of the main rotating structural member **16** when the main rotating structural member **16** pivots about point **42** so as to raise the apparatus **10** to the drill floor **64**.

Referring to FIG. **5**, there is shown the apparatus **10** in an intermediate position, with the main rotating structural member **16** positioned between the first and second positions. As can be seen, the gripper assembly **26** is engaged with the tubular **18**. The lever assembly **22** pivots and the grippers **30** and **32** translate along the stab frame **28** so that the end **79** of tubular **18** passes through the interior of the framework of the main rotating structural member **16**. Also, the arm **24** associated with the gripper assembly **26** serves to move the stab frame **28** of the gripper assembly **26** through the interior of the framework of the main rotating structural

member **16**. The grippers **30** and **32** translate along the side of the stab frame **28** while the arm **24** moves between the home position shown in FIG. **4** and the extended position shown in FIG. **7**. The brace **36** pulls on the first portion **48** of lever assembly **22** so as cause this motion to occur. The link **34** pulls on the end of the second portion **50** of the lever assembly **22** so as to draw the first portion **48** upwardly and to cause the movement of the stab frame **28** of the gripper assembly **26**. The hydraulic actuators **56** and **58** have been operated so as to urge the main rotating structural member **16** pivotally upwardly away from the first position. When moving from the first position to the second position, the first and second grippers **30** and **32** begin to move away from end **100** of the stab frame **28** and toward end **102** of the stab frame **28**. Compared with FIG. **4**, the second gripper **32** is further away from end **100** of the stab frame **28**. Thus, the first and second grippers **30** and **32** of the gripper assembly **26** translate along the side **116** of the stab frame **28** while the main rotating structural member **16** pivots from the first position to the second position.

Referring to FIG. **6**, there is shown a further intermediate movement of the main rotating structural member **16** of the apparatus **10** from the first position to the second position. Once again, the hydraulic actuators **56** and **58** urge the main rotating structural member **16** angularly upwardly away from the top surface of the skid **12**. This causes the link **34** to have a pulling force on the pivotal connection **68** of the second portion **50** of the lever assembly **22**. This causes the first portion **48** of the lever assembly **22** to move upwardly, thereby causing the arm **24**, in combination with the brace **36**, to lift the gripping assembly **26** further upwardly and draw the tubular **18** completely through the interior of the main rotating structural member **16**. The tubular **18** easily passes through the interior of the main rotating structural member **16** because the grippers **30** and **32** translated along the side of the stab frame **28** so as to keep the end of the tubular **18** from contacting the framework of the main rotating structural member **16**. As can be seen, the relative size and relation of the various components of the present invention achieve the movement of the tubular **18** without the need for separate hydraulic actuators.

As can be seen, first and second grippers **30** and **32** of the gripper assembly **26** have traveled further along the side of the stab frame **28**. That is, the grippers **30** and **32** move closer to the end **102** of the stab frame **28** and further away from end **100** of the stab frame **28** as the main rotating structural member **16** approaches the second position, or vertical orientation.

FIGS. **5** and **6** show the main rotating structural member **16** in positions between the first position shown in FIG. **4** and the second position shown in FIG. **7**. Additionally, FIGS. **5** and **6** show the arm **24** in positions between the home position shown in FIG. **4** and the extended position shown in FIG. **7**. When viewing FIGS. **4** through **7** in series, it can be seen that the grippers **30** and **32** translate along the side of the stab frame **28** while the main rotating structural member **16** pivots between the first and second positions and while the arm pivots between the home and extended positions.

Referring to FIG. **7**, there is shown a side elevational view of the apparatus **10** in the second position, with the drill tubular **18** in its vertical orientation. As can be seen, the drill tubular **18** is positioned directly above the underlying pipe **62** on the drilling rig **20**. The further upward pivotal movement of the main rotating structural member **16** is caused by the hydraulic cylinders **56** and **58**. This causes the link **34** to rotate and draw the end of the second portion **50** of the lever assembly **22** downwardly. The lever assembly **22** rotates about the pivot point **40** such that the first portion **48** of the lever assembly **22** has a pivot **72** at its upper end. The brace **36** is now rotated in a position so as to provide support for the arm **24** in this upper position. The gripper assembly **26** has grippers **30** and **32** aligned vertically and in spaced parallel relationship to each other. If any further precise movement is required between the bottom end **80** of the tubular **18** and the upper end **82** of pipe **62**, then the vehicle **14** can be moved slightly so as to achieve further precise movement. In the manner described hereinbefore, the tubular **18** has achieved a completely vertical orientation by virtue of the interrelationship of the various components of the present invention and without the need for complex control mechanisms and hydraulics. When the apparatus **10** is in the second position, the grippers **30** and **32** translate along the side **116** of the stab frame **28**. The first gripper **30** is adjacent the end **102** of the stab frame **28**. The first gripper **30** is furthest from end **100** when the apparatus **10** is in the second position. The grippers **30** and **32**, however, can be translated along the side of the stab frame **28** of the gripper assembly **26** between the ends **100** and **102** of the stab frame **28** so as to raise or lower the tubular **18** above the pipe **62** at the well head. Thus, the apparatus **10** of the present invention serves the additional purpose of delivering the tubular **18** to a pipe **62** vertically downwardly at a well head.

The grippers **30** and **32** grip the outer surface of the tubular **18** continuously as the apparatus **10** moves between the first and second positions. When the apparatus **10** delivers tubular **18** to the pipe **62**, the grippers **30** and **32** release the tubular **18** at the well head. The apparatus **10** then pivots from the second position to the first position so as to grip another tubular. The grippers **30** and **32** can travel along the side of the stab frame **28** of the gripper assembly **26** so as to be in a proper position near end **100** of the stab frame **28** for gripping another tubular.

In order to install the drill tubular **18** upon the pipe **62**, it is only necessary to vertically translate the grippers **30** and **32** on the stab frame **28** of the gripper assembly **26**. As such, the end **80** can be stabbed into the box connection **82** of pipe **62**. Suitable tongs, spinners, or other mechanisms can be utilized so as to rotate the tubular **18** in order to achieve a desired connection. The grippers **30** and **32** can then be released from the exterior of the tubular **18** and returned back to the original position such that another length of drill pipe can be installed.

Referring to FIG. **8**, there is shown a plan view of the preferred embodiment of a gripper **210** in a second position. Gripper **210** has a first position and second position that is not to be confused with the first and second position of the apparatus **10**. In the first position, the jaws **213** of the gripper **210** are open so as to avoid contact of the tubular **18**. In the second position shown in FIG. **8**, the gripper **210** grips tubular **18**. As can be seen in FIG. **8**, the gripper **210** has a jaw assembly **213** positioned around the outer surface of the tubular **212**. The jaw assembly **213** has tubular gripping surfaces **214** on the ends **215** thereof. The tubular gripping surfaces **214** contact the tubular **18** when the gripper **210** is in the second position. The gripper **210** has a housing **217**. The housing **217** covers the top, back, and bottom of the gripper **210**. The jaw assembly **213** has a portion that moves within the housing **217**. The unique configuration of the jaw assembly **213** allows the gripper **210** of the present invention to grip large and small diameters of tubulars without having to change the jaws of the jaw assembly **213**. Thus, the

gripper **210** of the present invention eliminates the need for additional adapters and thus removes the associated costs from gripping tubulars **18**.

The jaw assembly **213** has a first jaw **279** and a second jaw **216**. The first jaw **279** has a pipe-contacting surface **220** at one end **215** thereof. The second jaw **216** has a pipe-contacting surface **222** at one end **215** thereof. The first and second jaws **279** and **216** are connected to a drive yoke **252**. A first link **230** is connected to the first jaw **279** and the drive yoke **252**. The first link **230** is pivotally connected at a first pivot point **232** to the first jaw **279**. The first link **230** is pivotally connected at a second pivot point **270** to the drive yoke **252**. A second link **238** is connected to the second jaw **216** and to the drive yoke **252**. The second link **238** is connected at a first pivot point **240** to the second jaw **216**. The second link **238** is pivotally connected at a second pivot point **260** to the drive yoke **252**. An elastomeric pad is the pipe-contacting surface **220** of the first jaw **279**. As such, the pipe-contacting surface **220** is slightly flexible so as to avoid any damage to the outer surface of the tubular **18**. An elastomeric pad is the pipe-contacting surface **222** of the second jaw **216**. The links **230** and **238** assure a proper movement of the jaws **279** and **216** radially inwardly relative to the movement of the drive yoke **252**. The links **230** and **238** are anchored to housing **217**.

An actuator **248** is interconnected to the first jaw **279**, to the second jaw **216** and to the drive yoke **252** so as to move the tubular-contacting surfaces **220**, **222** and **242** radially inwardly and simultaneously for an identical distance. The drive yoke **252** is generally an elongated longitudinal member extending toward the tubular **18**. An elastomeric pad is located on the end **224** of the drive yoke **252** as the tubular-contacting surface **242**. The present invention contemplates that the pipe-contacting surfaces **220**, **222** and **242** can be an elastomeric pad of a gripper, a toothed die of a tong, or a roller of a spinner.

The first link **230** has a pivot point **232** at an end opposite pivot point **270**. Likewise, the second link **238** has a pivot point **240** at an end opposite pivot point **260**. As the drive yoke **252** moves toward the tubular **18**, the links **230** and **238** cause the respective jaws **279** and **216** to rotate the pipe-contacting surfaces **220** and **222** inwardly toward the outer surface of tubular **18**. If the diameter of tubular **18** is smaller, then the drive yoke **252** will move further toward the tubular **18** so as to cause the jaws **279** and **216** to rotate further inwardly. The movement of the drive yoke **252** causes the tubular-contacting surface **242** to contact the outer surface of tubular **18**.

A novel aspect of the gripper **210** of the present invention is that a variety of tubular diameters can be utilized without the need to change the jaws **279** and **216** of the gripping apparatus **210**. The present invention automatically grips different diameters of pipe while, at the same time, assuring a centering of such pipes with minimal error. The jaws **279** and **216** have two important measurements, R**1** and R**2**. R**1** is the distance between jaw pivot points **232** and **240** and the pipe-contacting surfaces **220** and **222** of the first and second jaws **279** and **216**, respectively. R**2** is the distance between the first pivot points **232** and **240** of the first and second links **230** and **238** and the jaw pivot points **228** and **236** of the first and second jaws **279** and **216**, respectively.

In the gripper **210**, distance R**1** is not equal to R**2**. Prior art is limited in that it requires R**1** to equal R**2**. Having R**1** not equal to R**2** in the present invention allows the present invention to grip different diameters of tubulars while simultaneously centering with minimal error. Any number of customized variations of tubular diameter ranges can be accommodated by geometrically solving for the optimum size of links **230** and **238** and appropriately sizing the distances R**1** and R**2** of the jaws **279** and **216** so as to provide the best mechanical advantage for the space available. Sizing the gripper **210** of the present invention in this manner allows the gripper **210** to grip with zero centering error for any two tubular reference diameters and nearly zero error for any tubular diameter between the reference diameters and just less than the smaller reference diameter and just more than the larger reference diameter. The apparatus **10** of the present invention achieves zero centering error for any two tubular diameters. The present invention contemplates that any range of diameters would have a large diameter that is several times the value of the small diameter, and wherein this range of tubular diameters would have exactly zero centering error for at least two specific sizes of pipe. The present invention also is unlimited in the geometry relative to the distances R**1** and R**2**. That is, R**1** and R**2** can be any values where R**1** is not equal to R**2**.

Another important and novel feature of the present invention is the orientation of the links **230** and **238**. First link **230** is pivotally connected to the drive yoke **252** at second pivot point **270**. Link **230** angles outwardly to first pivot point **232**, where the first link **230** is pivotally connected to the first jaw **279**. Likewise, the second link **238** is pivotally connected to the drive yoke **252** at second pivot point **260** and angles outwardly to first pivot point **240**, where the second link **238** is pivotally connected to the second jaw **216**. The outward angle of links **230** and **238** uses less space than prior art gripping apparatuses that have links extending parallel to the length of the gripper. Thus, the gripper **210** of the present invention can be used in smaller spaces than prior art gripping apparatus. The links **230** and **238** move both laterally and longitudinally, as opposed to only longitudinally.

When it is desired to release the tubular **18**, it is only necessary for the piston-and-cylinder assembly of actuator **248** to move rearwardly. This serves to cause the tubular-contacting surfaces **220**, **222** and **242** of the first jaw **279**, second jaw **216**, and drive yoke **252**, respectively, to move radially outwardly away from the outer surface of the tubular **18** so as to properly release the tubular **18** in a desired location. Further movement of the piston-and-cylinder assembly **54** of the actuator **248** rearwardly of the gripper **210** will cause the jaws **279** and **216**, along with the drive yoke **252**, to move the tubular-contacting surfaces **220**, **222** and **242** further away from each other so that this opening will allow the introduction of another tubular **18**. Through the use of the present invention, a variety of tubular diameters can be utilized without the need to change the gripping gripper **210**. The gripper **210** of the present invention automatically grips different diameters of tubular while, at the same time, assuring a proper centering of such tubulars. The size of the links **230** and **238**, along with the relationship between the respective pivot points **232**, **270**, **240**, and **260**, is engineered so as to assure such simultaneous movement.

FIG. **9** is an isometric exploded view of an alternative embodiment of the tubular handling apparatus, illustrated as a counterbalanced tubular handling apparatus **300**. In the view, tubular handling apparatus **300** has a generally rectangular frame **310** comprised of substantially parallel side bars **320** and **322**. Side bars **320** and **322** are separated by upper end **312** and lower end **314**. An actuator support **316** may be located between side bars **320** and **322** and also

between ends **312** and **314**. In one embodiment, a translatable rail **324** is located on the inside of each side bar **320** and **322**.

A first gripper **330** is provided having jaws **334** for clamping onto a tubular. A guide assembly **332** is provided on each exterior side of first gripper **330** for engaging rails **324** in a translatable relationship, such as by sliding or other means. A load transition spring assembly (LTSA) **340** is provided on the bottom of first gripper **330**.

An actuator base **318** is located on stab frame **310**, between side bars **320** and **322**, and above lower end **314** of stab frame **310**. An actuator support **316** is located between side bars **320** and **322**, and between actuator base **318** and upper end **312** of stab frame **310**. An extendable and retractable actuator **360** is secured to stab frame **310**, at actuator base **318** and actuator support **316**.

A second gripper **350** is provided having jaws **354** for clamping onto a tubular. In one embodiment, a guide assembly **352** is provided on each exterior side of second gripper **350** for engaging rails **324** to position second gripper **350** on stab frame **310**. Second gripper **350** is rigidly attached to a stab frame **310** between side bars **320** and **322**, and beneath actuator base **318**. Second gripper **350** may be supported on stab frame **310** by a gripper support **372**. Gripper support **372** is located below actuator base **318** and between side bars **320** and **322** such that it may support the weight of second gripper **350**.

FIG. **10** is an isometric view of the embodiment of the invention of FIG. **9**, illustrated with tubular handling apparatus **300** assembled, and with first gripper **330** shown in a lowered position, with actuator **360** fully retracted. This is a typical position for attachment to a tubular that is resting vertically on a drill floor.

FIG. **11** is an isometric view of the embodiment of the invention of FIGS. **9-10** illustrated with tubular handling apparatus **300** assembled, and with first gripper **330** shown in a raised position within stab frame **310**, with actuator **360** fully extended. This is a typical position for moving a tubular after picking it up.

FIG. **12** is a close up view of the embodiment of the invention of FIGS. **9-11**, illustrating one embodiment of the guide assembly **332** and LTSA **340** features of the invention. Guide assemblies **332** may include replaceable wear components **336** for engaging rails **324** on the interior of side bars **320** and **322**. LTSA **340** prevents hyperextension and damage to actuator **360** when first gripper **330** and second gripper **350** are gripping a tubular, and the tubular engages another structure or other tubular. LTSA **340** further acts to prevent transfer of impact forces between the tubular and actuator **360** and the remainder of tubular handling system **300**.

In the novel configuration illustrated, first gripper **330** and second gripper **350** are located between side bars **320** and **322**. First gripper **330** is vertically translatable relative to stab frame **310**, whereas second gripper **350** is stationary therein.

The foregoing disclosure and description of the invention is illustrative and explanatory thereof. Various changes in the details of the illustrated construction can be made without departing from the true spirit of the invention. The present invention should only be limited by the following claims and their legal equivalents.

The invention claimed is:

1. A tubular handling apparatus comprising:
- a structural member movable between a first position and a second position;
- an opening in the structural member;
- an arm interconnected to the structural member so as to be movable in relation to the structural member;
- a frame comprising:
  - a pair of opposing side bars;
  - an upper end located between the side bars; and,
  - a lower end located between the side bars;
- the frame having a first side affixed to the arm, and having an opposite second side;
- a first and second gripper connected to the frame and extending outwardly from the second side, the first and second grippers being operable to grip a surface of a tubular;
- an actuator mounted between the first and second gripper, the actuator operable to translate the first gripper along the frame relative to the second gripper; and,
- the frame being movable through the opening in the structural member as the structural member moves between the first and second positions.

2. The tubular handling apparatus of claim **1**, the frame further comprising:
- a translatable rail located on each side bar.

3. The tubular handling apparatus of claim **2**, further comprising:
- a guide assembly on an exterior side of the first gripper engagable with the translatable rail in a translatable relationship.

4. The tubular handling apparatus of claim **2**, further comprising:
- an actuator support attached between the side bars;
- the support located between the actuator base and the first gripper;
- the support connected to the actuator; and,
- the support stabilizing the actuator between the side bars while permitting extension and retraction of the actuator.

5. The tubular handling apparatus of claim **1**, the frame further comprising:
- an actuator base located between the sidebars;
- the actuator base located between an upper end of the frame and the second gripper;
- a lower end of the actuator mounted to the actuator base;
- an upper end of the actuator connected to the first gripper; and,
- operation of the actuator moving the first gripper along the frame in relation to the position of the second gripper.

6. The tubular handling apparatus of claim **5**, further comprising:
- a load transition spring assembly connected between the actuator and first gripper.

7. The tubular handling apparatus of claim **5**, further comprising:
- the guide assembly having a replaceable wear component; and,
- the wear component engaging the rail.

* * * * *